METRIC
MIL-PRF-89037A
1 August 2002
SUPERSEDING
MIL-PRF-0089037(NIMA)
25 May 1999

PERFORMANCE SPECIFICATION
DIGITAL TOPOGRAPHIC DATA (DTOP)

This specification has been approved for use by all Departments and Agencies of the Department of Defense.

1. SCOPE

1.1 Scope. This product specification defines the content and format requirements for the National Imagery and Mapping Agency's (NIMA) Digital Topographic Data (DTOP) files in Vector Product Format (VPF). This product will replace the current digital Interim Terrain Data (ITD) and Vector Product Interim Terrain Data (VITD) products for users requiring Terrain Analysis type data on Compact Disc – Read Only Memory (CD-ROM).

1.2 Purpose. The purpose of this specification is to assure uniformity of treatment among all mapping and charting elements engaged in a coordinated production and maintenance program for this product. This specification provides a description of the content, accuracy, data format, and design of the DTOP product. DTOP is a vector based product that portrays selected military geographic information containing features of topographic and tactical military significance in a standardized georelational structure. DTOP is designed to support tactical military and Geographic Information System (GIS) applications in selected geographic areas.

2. APPLICABLE DOCUMENTS

2.1 General. The documents listed in this section are specified in Sections 3 and 4 of this specification. This section does not include documents cited in other sections of this specification or recommended for additional information or as examples. While every effort has been made to ensure the completeness of this list, document users are cautioned that they must meet all specified requirements documents cited in Sections 3 and 4 of this specification, whether or not they are listed.

Beneficial comments (recommendations, additions, deletions) and any pertinent data which may be of use in improving this document should be addressed to: Director, National Imagery and Mapping Agency, ATTN: National Center for Geospatial Intelligence Standards, Mail Stop P-24, 4600 Sangamore Road, Bethesda, MD 20816-5003 by using the Standardization Document Improvement Proposal (DD Form 1426)appearing at the end of this document or by letter.

AMSC N/A **AREA MCGT**

DISTRIBUTION STATEMENT A. Approved for public release; distribution is unlimited.

2.2 Government documents.

2.2.1 Specifications, standards, and handbooks. The following specifications, standards, and handbooks form a part of this document to the extent specified herein. Unless otherwise specified, the issues of these documents are those listed in the current Department of Defense Index of Specifications and Standards (DODISS) and the supplement thereto, cited in the solicitation (see 6.2).

SPECIFICATIONS

DEPARTMENT OF DEFENSE

MIL-T-89304	-	Tactical Terrain Analysis Data Base (TTADB) Scale 1:50,000
MIL-T-89301A	-	1:50,000 scale Topographic Maps of Foreign Areas

STANDARDS

FEDERAL INFORMATION PROCESSING STANDARDS

FIPS 10-4	-	Countries, Dependencies, Areas of Special Sovereignty, and Their Principal Administrative Divisions

DEPARTMENT OF DEFENSE

MIL-STD-2407	-	Vector Product Standard
MIL-STD-2414	-	Bar Coding for MC&G Products

HANDBOOK

DEPARTMENT OF DEFENSE

MIL-HDBK-9660	-	DoD Produced CD-ROM Products

NATO STANDARDIZATION AGREEMENTS (STANAGS)

STANAG 2211	-	Geodetic Datums, Spheroids, Grids, and Cell References

(Unless otherwise indicated, copies of the above specifications, standards, and handbooks are available from the DoD Single Stock Point (DODSSP), Building. 4D, 700 Robbins Avenue, Philadelphia, PA 19111-5094, or on-line at the DoDSSP web site at www.dodssp.daps.mil. Copies of Federal Information Processing Standards (FIPS) are available to Department of Defense activities from the DODSSP(address as above). Others must request copies of FIPS from the National Technical Information Services, 5285 Port Royal Road, Springfield, VA 22161-2117.)

2.2.2 Other Government documents, drawings, and publications. The following other Government documents, drawings, and publications form a part of this document to the extent specified herein. Unless otherwise specified, the issues are those cited in the solicitation.

NATIONAL IMAGERY AND MAPPING AGENCY (NIMA)

NIMA Technical Report (NIMA TR) TR8350.2 - Department of Defense World Geodetic System 1984. (NSN 7643-01-402-0347)

(Copies of the above publication are available from the Defense Logistics Agency.)

Digital Geographic Information Exchange Standard (DIGEST), Edition 1.2,January 1994.

(Copies of the above publication are available from the National Imagery and Mapping Agency, National Center for Geospatial Intelligence Standards, Mail Stop P-24, 4600 Sangamore Road, Bethesda, MD 20816-5003.)

2.3 Non-Government publications. The following documents form a part of this document to the extent specified herein. Unless otherwise specified, the issues of the documents which are DoD adopted are those listed in the issue of the DODISS cited in the solicitation. Unless otherwise specified, the issues of documents not listed in the DODISS are the issues of the documents cited in the solicitation (see 6.2).

Bureau of the Budget, United States National Map Accuracy Standard, GPO, 1947.

(This standard is printed in its entirety in Thompson, Morris M., Maps for America, U.S. Geological Survey, 3rd ed., 1988, p. 104)

ISO 9660. 1988 (E). International Organization for Standardization Information Processing - Volume and File Structure of CD-ROM for Information Interchange. First edition, 1988.

(Application for copies should be addressed to the American National Standards Institute, 1430 Broadway, New York, NY 10018.)

(Non-government standards and other publications are normally available from the organizations that prepare or distribute the documents. These documents also may be available in or through libraries or other information services.)

2.4 Order of precedence. In the event of a conflict between the text of this document and the references cited herein (except for related associated detail specifications, specification sheets, or MS standards), the text of this document takes precedence. Nothing in this document, however, supersedes applicable laws and regulations unless a specific exemption has been obtained.

3. REQUIREMENTS

3.1 First article. When specified (see 6.2), a sample shall be subjected to first article inspection in accordance with 4.2.

3.2 Accuracy.

3.2.1 Absolute horizontal accuracy. This represents the difference between the recorded horizontal coordinates of features and their true positions. Absolute horizontal accuracy is expressed as a circular error at 90 percent probability (.9p). The horizontal accuracy requirement for DTOP is 50 meters circular error at 90 percent probability.

3.2.2 Absolute vertical accuracy. This represents the difference between an assigned elevation and the true elevation at a specific point. In this comparison, both elevations must be referenced to MSL. A point's elevation may be listed as a vertex coordinate of a feature. The vertical accuracy requirement for DTOP is ±20 meters at 90 percent probability.

3.2.3 Relative accuracy. A formal relative accuracy for DTOP has not been defined by the users of this product.

3.3 Datum.

3.3.1 Horizontal datum. The horizontal datum for this DTOP product shall be the World Geodetic System 1984 (WGS84), as identified in NIMA TR 8350.2. If source map sheets are not referenced to WGS84, data used will be converted from their original horizontal datum to WGS84.

3.3.2 Vertical datum. The vertical datum for this DTOP product shall be mean sea level (MSL).

3.4 Security.

3.4.1 Security classification. The security classification of the products generated by the use of these specifications will be the lowest category practicable. When it is necessary to assign a security classification to the product, it shall be in accordance with established national security procedures.

3.4.2 Security classification of product. The CD-ROM discs containing DTOP data vary in classification depending on the geographic location covered by the data. The CD-ROM will carry the classification of the most restrictive classification of any tile or library contained within that particular compact disk.

3.4.3 Security classification of specification. This performance specification, MIL-PRF-89037A, is UNCLASSIFIED.

3.5 Continuity. All DTOP data are subject to the portrayal criteria specified in Appendix E.

a. Each DTOP database shall be organized into VPF libraries such that a seamless product is produced where data are present. Data gaps between a DTOP library may exist due to absence of data. No data overlap shall exist in the libraries of this DTOP database.

b. Where data collection procedures require individual source sheets, digital files or other media to be combined, features crossing source boundaries shall be continuous whenever possible. Exceptions to this rule occur when more current source data are used and the feature position or presence has changed, or a mismatch occurs due to different specifications of the incorporated source data. In these cases, a discontinuity along a source boundary shall occur and be documented in the Data Quality coverage.

3.6 Thematic layer organization. DTOP products are organized into thematic layers. Each DTOP thematic layer is stored as a single coverage at the VPF coverage level. DTOP has one reference library level, composed of one reference coverage and three thematic coverages. In the DTOP data library level there are two reference coverages and fourteen thematic coverages (TABLE 1).

TABLE 1. DTOP coverages by VPF structure level.

VPF structure level	**DTOP Coverages (thematic layers)**	**Coverage (Directory) name**
Reference Library	Library Reference	libref
	Database Reference	dbref
	Political Entities	polbnd
	Place Names	placenam
Data Library	Library Reference	libref
	Tile Reference	tileref
	Beach	bch
	Boundaries	bnd
	Data Quality	dq
	Hydrography	hydro
	Industry	ind
	Obstacles	obs
	Physiography	phys
	Population	pop
	Surface Drainage	sdr
	Slope/Surface Configuration	slp
	Soil/Surface Materials	smc
	Transportation	trans
	Utilities	util
	Vegetation	veg

3.7 Dimensions.

3.7.1 Unit of measure. The unit of measure for DTOP is metric.

3.7.2 Minimum sizes. The minimum size of features collected from source materials shall be in conformance with the portrayal criteria and

attribute values provided in the DTOP data dictionary, Appendix E. Features may be captured as points, nodes, lines, or areas.

3.8 Feature and attribute coding scheme.

a. This version of DTOP, MIL-PRF-89037A implements selected features, attributes, and attribute values from the Digital Geographic Information Exchange Standard (DIGEST), Part 4, Feature Attribute Coding Catalog (FACC), edition 1.2, January 1994, as well as a number of proposed attributes. Please note that some of the proposed attributes were not accepted or were accepted and/or changed (as was one feature) by the Digital Geographic Information Working Group (DGIWG) after publication of FACC 1.2. Therefore, this version of DTOP is no longer in compliance with the current version of DIGEST, Part 4, FACC, edition 2.0, June 1997. See Appendix G for a list of non-compliant features and attributes. See Appendixes E and F for a listing of the FACC feature codes and attribute codes allowable for these DTOP thematic files.

b. This product implements value-added attributes. These attributes will be populated with established default values, in most cases the value is unknown. These values can be modified with individual user’s application software, since precision or reliability of those attributes exceed current production methods. All value-added attributes are labeled in the data dictionary description in Appendix E.

3.8.1 Unknown, not applicable and null values. In cases where FACC does not assign an unknown or null attribute value, and one is required to populate a field, refer to data dictionary tables in Appendix E for the appropriate unknown and null value for the attribute column.

3.8.1.1 Unknown value condition.

a. The FACC system supports the use of an attribute value which signifies an “unknown” condition. Generally, with few exceptions, FACC implements a value of 0 to represent an unknown data condition for integer values. For text data types, the field will contain the characters ‘UNK’.

b. During data capture, it may not be possible to determine the value of an attribute using the inclusion conditions or collateral data sources. When FACC provides an attribute value to support the “unknown” condition, it must be used. In cases where the “0” value is already used to represent a valid number, an alternative value is needed to represent the unknown condition. These values may be found in Appendix E

3.8.1.2 Not applicable condition. In a few cases a FACC attribute contains a value for a “Not applicable” condition. This does not have the same meaning as “Unknown”. For example, the FACC Building feature, AL015, contains the attribute Product Category (PRO). If the building has a Building Function Category attribute value (BFC) that is equal to house of worship (i.e., 7), then the PRO attribute value 132 is entered for the feature indicating the “Not Applicable” condition. This condition is not the same as having an unknown building feature type.

3.8.1.3 Null value conditions.

a. Some feature classes may have attribute columns present in the feature table which are defined for some features, but not others. In this case a null value is entered for those attribute values when they do not apply to the feature code. The DTOP standard for implementing the null value for FACC utilizes the VPF-defined null.

b. In general, the maximum negative value is used to represent a null value for integer and an “N/A” for fixed length text data types. For variable length text data types (T*), zero length will represent the null value, which is abbreviated as ‘VLT=0’ in appropriate feature tables. The null value will be present in a field when an attribute column is not defined for a feature code. (refer to Table 56 of the MIL-STD-2407)

3.9 Coordinate system. DTOP data shall be stored in decimal degrees as geographic coordinates with southern and western hemispheres having a negative sign for latitude and longitude, respectively. The horizontal resolution for the geographic coordinates shall be stored to the equivalent precision of 0.01 arc seconds or 0.000002 decimal degrees. The GEOREF reference system is used to represent the geographic location of tiles.

3.10 Data format. DTOP will be produced in Vector Product Format (VPF), which provides a standard format for storing digital vector cartographic data. Refer to the VPF military standard (MIL-STD-2407) for more detail on VPF format and structure. This specification provides guidance for the specific implementation of DTOP in VPF.

3.11 Database description. Each DTOP database is a vector-based product implemented in VPF, as defined in MIL-STD-2407. This product is designed to support Geographic Information System (GIS) applications with geographic data at high resolution. Data at this resolution are separated into 14 thematic layers, where each layer contains thematically consistent data. The DTOP thematic layers are organized into coverages contained in VPF libraries (see TABLE 1). The DTOP product will include four databases, with each database equating to a quadrant of the world. Each DTOP database contains a reference library containing generalized data coverages to orient the user to the database. Each coverage contains a set of files that describe the features in that thematic layer.

3.11.1 File structure. DTOP data shall utilize the standard Disk Operating System (DOS) directory structure as specified in the VPF Military Standard, MIL-STD-2407.

3.11.2 Distribution medium. DTOP will be distributed on CD-ROM disc implementing ISO 9660 for CD-ROM formatting. Multiple libraries may exist on one CD-ROM. Each library will be fully contained on a single disc.

3.12 VPF table and file structure. Three types of VPF files are implemented in this DTOP database: directories, tables, and indexes.

3.12.1 Directories. All DTOP database files and tables are contained in a hierarchy of system-level directories in accordance with the VPF standard, MIL-STD-2407. Contained within these directories are the tables and indexes that provide information about the database.

3.12.2 VPF tables. Each directory within a DTOP database contains VPF tables, as defined in VPF Military Standard MIL-STD-2407. Figure 1 defines DTOP implementation of VPF tables.

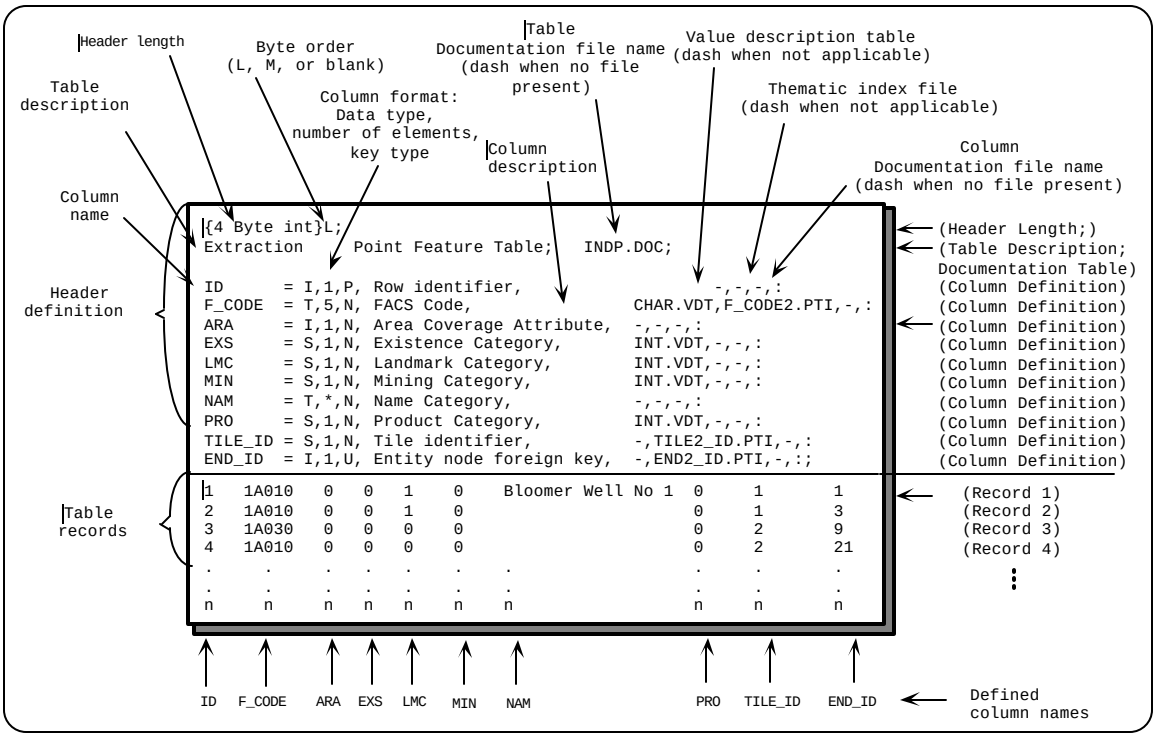

FIGURE 1. Illustration of a VPF table. (This is a generalized example of a DTOP feature table.)

Note 1: The VPF tables defined in this specification shall include all columns specified.

Note 2: Spaces are not a part of the header and are shown for clarity.

3.12.3 Indices. The DTOP product contains four types of index files: spatial indices, thematic indices, variable-length indices and feature index tables. The spatial indices will be defined for all primitive tables. The structure format of indices are defined in MIL-STD-2407. A bucket size of 8 shall be used for the creation of spatial indices.

3.13 DTOP directory organization.

3.13.1 DTOP Regional Databases. DTOP consists of four regional databases. Each CD-ROM shall contain a single database directory and two or more library directories including one reference library and at least one data library. The database header and library attribute tables shall be duplicated for each CD-ROM within a regional database area. Each data library contains a mix of reference coverages and thematic coverages. The VPF structure levels and DTOP implementation are depicted in Figure 2.

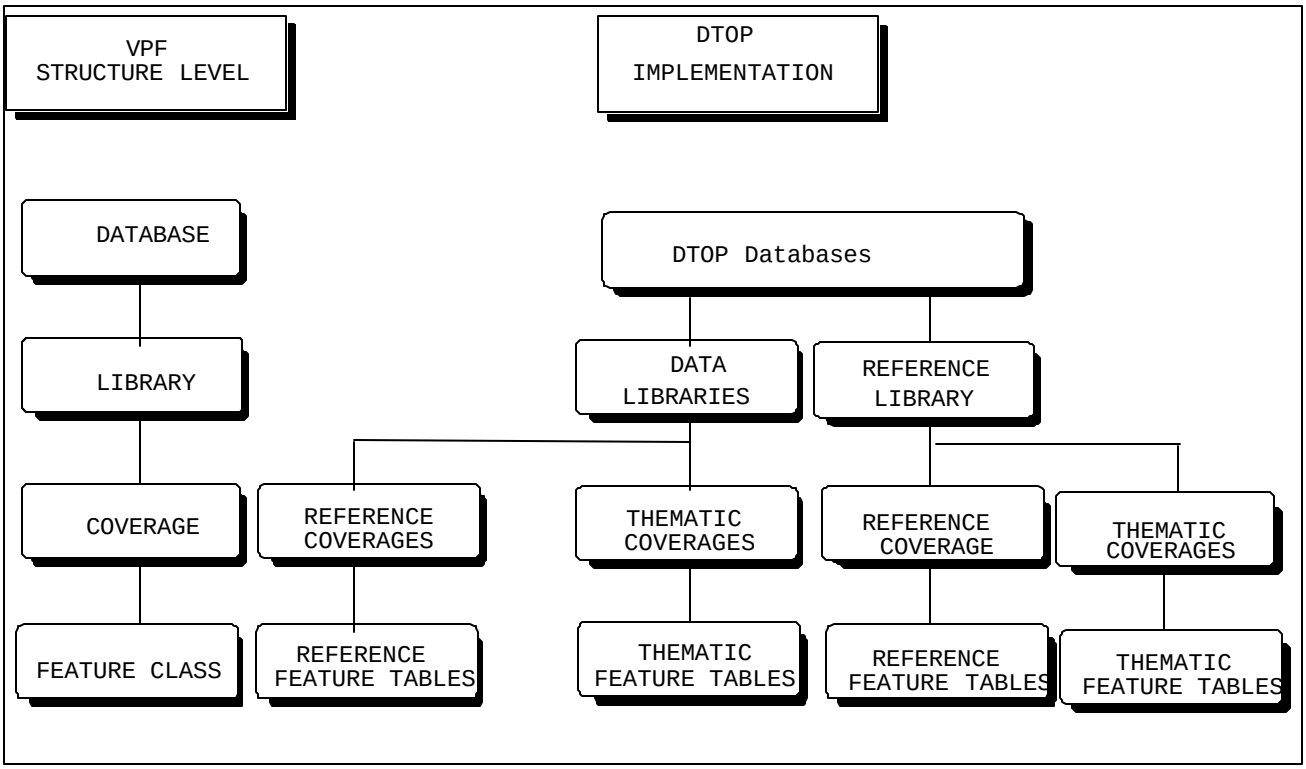

FIGURE 2. VPF structure levels and DTOP implementation.

3.13.2 Reference and data library directory. The DTOP reference library directory (RFERENCE) shall contain three thematic coverage directories. These coverages are not tiled. DTOP data library directories shall contain up to fourteen thematic coverage directories. Library directory names reflect the geographic content of the library and will be provided to the producer as part of the source package.

3.13.3 Coverage level thematic data. DTOP thematic data at the VPF coverage level in each data library are tiled in order to manage the large amounts of data. Therefore, primitive files are stored in a hierarchy of tile directories under each VPF coverage directory.

3.14 VPF structure levels, tables, and files. The following sections present the tables and files according to VPF structure level. The structure levels are presented as follows: database, library, coverage, and feature class. Each VPF directory contains VPF tables and files that provide information about the DTOP database. Some files contain geographic data represented as spatial and tabular files. Other files contain metadata that provide descriptive information about the database and are represented as tabular files. The record layout and content of the DTOP tables and files are described in Appendix E.

3.14.1 Database directory files.

a. The Digital Topographic Data product is composed of four regional databases that have their own unique database directory files. The database

directory name shall be represented in lower case characters. The appropriate database directory shall be present on each CD-ROM disc containing its own unique DTOP libraries, and it shall be the first file appearing on a CD-ROM. The tables and files contained in the DTOP database directory are described below. A representation of the tables and files appearing in the DTOP database level are depicted in FIGURE 3.

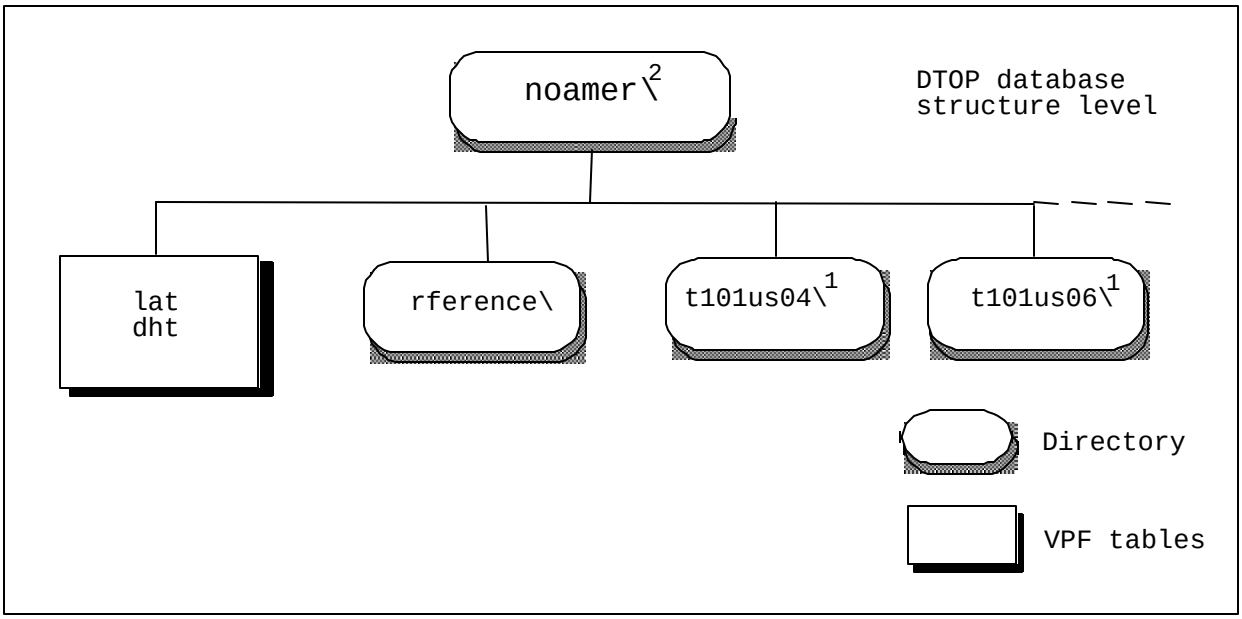

[1]These are representative directory names for DTOP libraries.
[2]This is a representative directory name for a DTOP database.

FIGURE 3. DTOP database directory.

b. The database directory contains two required metadata tables. The required tables include the Library Attributee Table (lat) and Database Header Table (dht), see Table 2.

TABLE 2. DTOP database table and file names and description.

Table or File Description	**Table or File Name**
DTOP database directory	noamer[1]
Library Attribute Table	lat
Database Header Table	dht
Reference library	rference
DTOP library directories	t101us04[2]

[1]This is a representative directory name for DTOP database.
[2]This is a representative directory name for a DTOP library.

3.14.2 Database and library naming conventions.

a. The DTOP product will contain four databases. The extent of each database will correspond to a quadrant of the world. The appropriate database name shall be one of: noamer, soamafr, sasaus, or eurnasia.

b. DTOP library names are an eight character code in which the first character is “t” indicating topographic data of the DTOP. The next three characters “xxx” represent the VMap level 1 library name: 1 to 240 (approximate number) libraries. The next two characters represent the country code in FIPS 10-4, and the last two characters “0 – 99” represent the individual libraries.

3.14.3 Library directory files. The contents of each DTOP library are stored in a directory, whose name shall be no more than eight lower case alphanumeric characters in length. The entire contents of one or more DTOP libraries shall be contained on a CD-ROM. A representation of the tables and files present in a DTOP library is given in Figures 4 and 5.

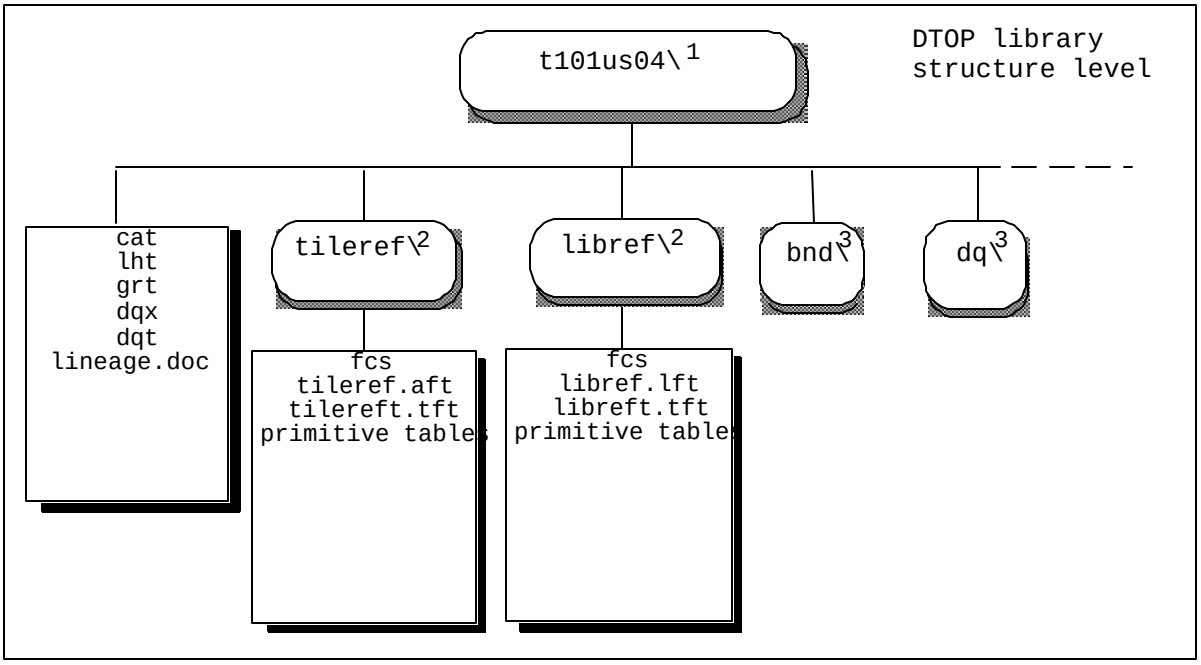

[1]These are representative directory names for DTOP libraries.
[2]These represent reference coverage directories.
[3]These represent thematic coverage directories.

FIGURE 4. DTOP data library structure.

3.14.3 Library directory files.

3.14.3.1 Library metadata.

a. Each library directory shall contain five required metadata tables and one variable-length index (data quality index (DQX)). These include the coverage attribute table (CAT), library header table (LHT), geographic reference table (GRT), data quality table (DQT), and lineage narrative table (LINEAGE.DOC). Each DTOP library must contain these five VPF files.

b. Contents and format for the CAT, LAT, GRT, DQT and DQX are defined in MIL-STD-2407. Product specific content information is defined in Appendixes C and D of this specification.

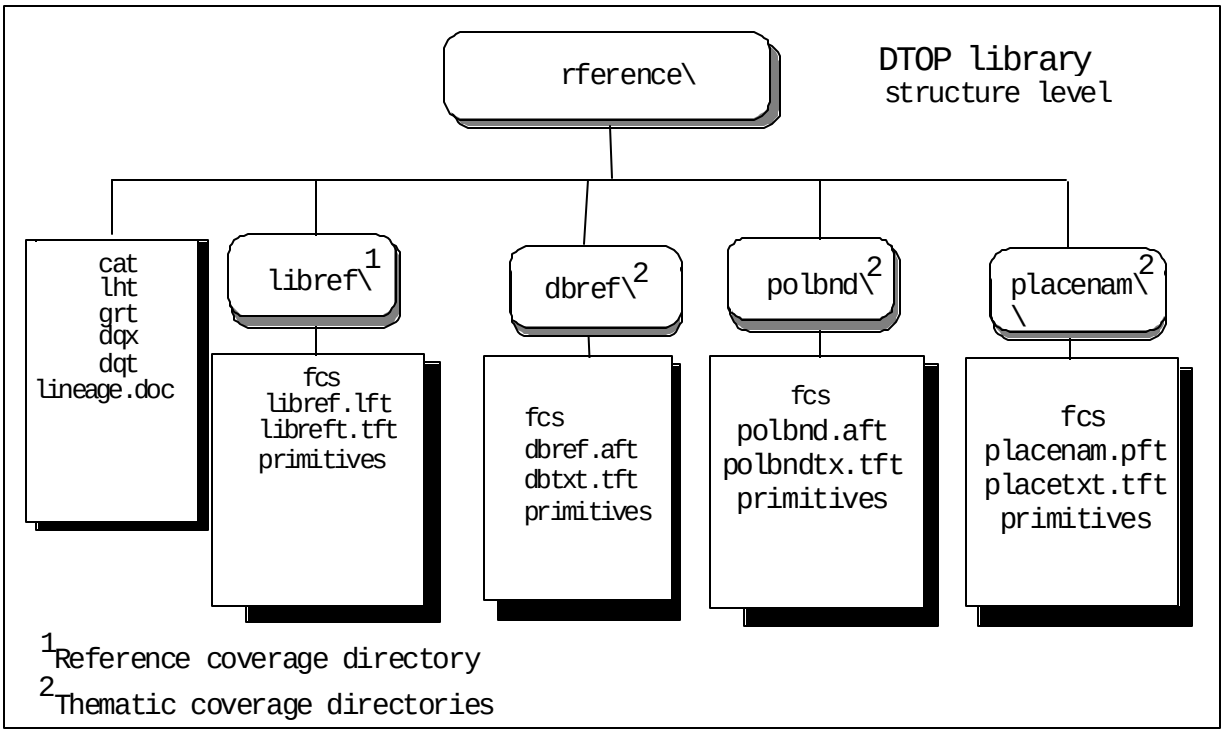

FIGURE 5. DTOP reference library structure.

c. The LINEAGE.DOC table is a data quality file which describes how the data were processed for the database. It provides a textual description of the procedures used to collect the data in each DTOP library, including special processing techniques, processing tolerances, feature interpretation rules, and basic production quality assurance procedures, feature integration schemes, and database design issues. This information is common to all coverages in the library.

3.14.3.2. Library reference coverages.

a. Each tiled DTOP data library shall contain the Tile Reference Coverage (TILEREF) and Library Reference Coverage (LIBREF) as defined by MIL-STD-2407. These coverages are not tiled so that all feature tables and primitive tables reside under the respective coverage directory. These coverages also share the same coordinate system, and are spatially coincident. The records of the feature tables are in one-to-one correspondence with the

associated primitive table records. The tables in these coverages are shown in TABLE 3.

TABLE 3. DTOP library tables, file names, and description.

Table or File Description	Table or File Name
Directory	noamer\t101us04\[1]
Coverage Attribute (Description) Table	cat
Library Header Table	lht
Geographic Reference Table	grt
Data Quality Index File	dqx
Data Quality Table	dqt
Lineage Documentation File	lineage.doc
Tile Reference Coverage Directory	noamer\t101us04\tileref\
Feature Class Schema Table	fcs
Tile Reference Area Feature Table	tileref.aft
Tile Reference Text Feature Table	tilereft.tft
primitive tables[2]	primitive tables and indices
Library Reference Coverage Directory	noamer\t101us04\libref\
Feature Class Schema Table	fcs
Library Reference Line Feature Table	libref.lft
Library Reference Text Feature Table	libreft.tft
primitive tables[2]	primitive tables and indices

[1]This is a representative directory name for DTOP libraries.
[2]Primitive tables are described in 3.14.6.

b. The RFERENCE library is untiled and shall contain a Library Reference coverage (LIBREF). The DTOP LIBREF coverages shall be based on a small scale depiction of features identified in Appendixes C and D.

3.14.4 Coverage directory files. All thematic coverages are contained within a library directory. All DTOP thematic coverages share the same coordinate system, are spatially registered to one another, and contain tiled primitive tables. A list of the DTOP coverage directories and a brief description are shown in TABLE 4. A representation of the tables and files in the data library coverages is depicted in FIGURE 6. A representation of the tables and files in the reference library coverages is depicted in FIGURE 7.

TABLE 4. Directories and descriptions for DTOP thematic coverages.

Library	**Coverage Description**	**Coverage Name**
Data Libraries	Library Reference	libref
	Tile Reference	tileref
	Beach	bch
	Boundaries	bnd
	Data Quality	dq
	Hydrography	hydro
	Industry	ind
	Obstacles	obs
	Physiography	phys
	Population	pop
	Slope/Surface Configuration	slp
	Soils/Surface Materials	smc
	Surface Drainage	sdr
	Transportation	trans
	Utilities	util
	Vegetation	veg
Reference Library	Library Reference	libref
	Database Reference	dbref
	Political Entities	polbnd
	Place Names	placenam

t101us01\	...	t101us04\	...	t101us10\		t101us15\		data libraries
bch\	bnd\	dq\	hyd\	ind\	obs\	phy\	pop\	coverages
fcs *.aft,*.ajt char.vdt,.vdx int.vdt,.vdx #.jti fca,fcx fac.fit fafitpid.fti fafittid.fti fafitfc.fti fafitfid.fti **xxxx\ tile directory** fac fbr,fsi rng edg ebr,esi,edx cnd csi,cnx	fcs *.aft,*.ajt *.lft,*.ljt *.pft,#.pti bndtxt.tft #.ati,#.lti #.jti, #.nti #.tti fca,fcx char.vdt,.vdx int.vdt,.vdx fac.fit fafitpid.fti fafittid.fti fafitfc.fti fafitfid.fti edg.fit edfitpid.fti edfittid.fti edfitfc.fti edfitfid.fti end.fit enfitpid.fti	fcs *.aft,*.ajt *.lft,*.ljt dqtxt.tft fca,fcx char.vdt,.vdx int.vdt,.vdx *.rat, *.rax fac.fit fafitpid.fti fafittid.fti fafitfc.fti fafitfid.fti edg.fit edfitpid.fti edfittid.fti edfitfc.fti edfitfid.fti txt.fit txfitpid.fti txfittid.fti	fcs *.aft,*.ajt *.lft,*.ljt *.pft,#.pti hydrotxt.tft #.ati,#.lti #.jti, #.tti fca,fcx char.vdt,.vdx int.vdt,.vdx fac.fit fafitpid.fti fafittid.fti fafitfc.fti fafitfid.fti edg.fit edfitpid.fti edfittid.fti edfitfc.fti edfitfid.fti end.fit enfitpid.fti	fcs *.aft,*.ajt *.lft,*.ljt *.pft,#.pti indtxt.tft #.ati,#.lti #.jti, #.tti fca,fcx char.vdt,.vdx int.vdt,.vdx fac.fit fafitpid.fti fafittid.fti fafitfc.fti fafitfid.fti edg.fit edfitpid.fti edfittid.fti edfitfc.fti edfitfid.fti end.fit enfitpid.fti	fcs *.aft,*.ajt *.lft,*.ljt #.ati,#.lti #.jti fca,fcx char.vdt,.vdx int.vdt,.vdx fac.fit fafitpid.fti fafittid.fti fafitfc.fti fafitfid.fti edg.fit edfitpid.fti edfittid.fti edfitfc.fti edfitfid.fti	fcs *.aft,*.ajt *.lft,*.ljt *.pft,#.pti phystxt.tft #.ati,#.lti #.jti,#.tti fca,fcx char.vdt,.vdx int.vdt,.vdx fac.fit fafitpid.fti fafittid.fti fafitfc.fti fafitfid.fti edg.fit edfitpid.fti edfittid.fti edfitfc.fti edfitfid.fti end.fit enfitpid.fti	fcs *.aft,*.ajt *.lft,*.ljt *.pft,#.pti poptxt.tft #.ati, #.jti,#.tti fca,fcx char.vdt,.vdx int.vdt,.vdx *.rat, *.rax *.rjt fac.fit fafitpid.fti fafittid.fti fafitfc.fti fafitfid.fti edg.fit edfitpid.fti edfittid.fti edfitfc.fti edfitfid.fti	tables, files, indices

1 This is a representative DTOP library directory name.

* The asterisk is replaced with the prefix of the point, node, line, or area feature class name.

\# The pound is replaced with the prefix of the thematic index name, which is based on the column name to which the index refers.

FIGURE 6. DTOP data library

	enfittid.fti enfitfc.fti enfitfid.fti cnd.fit cnfitpid.fti cnfittid.fti cnfitfc.fti cnfitfid.fti txt.fit txfitpid.fti txfittid.fti txfitfc.fti txfitfid.fti **xxxx\ tile directory** fac fbr,fsi rng edg ebr,esi,edx cnd csi,cnx end nsi txt tsi,txx	txfitfc.fti txfitfid.fti **xxxx\ tile directory** fac fbr,fsi rng edg ebr,esi,edx cnd csi,cnx txt tsi,txx	enfittid.fti enfitfc.fti txt.fit txfitpid.fti txfittid.fti txfitfc.fti txfitfid.fti **xxxx\ tile directory** fac fbr,fsi rng edg ebr,esi,edx cnd csi,cnx end nsi txt tsi,txx	enfittid.fti enfitfc.fti txt.fit txfitpid.fti txfittid.fti txfitfc.fti txfitfid.fti **xxxx\ tile directory** fac fbr,fsi rng edg ebr,esi,edx cnd csi,cnx end nsi txt tsi,txx	**xxxx\ tile directory** fac fbr,fsi rng edg ebr,esi,edx cnd csi,cnx	enfittid.fti enfitfc.fti txt.fit txfitpid.fti txfittid.fti txfitfc.fti txfitfid.fti **xxxx\ tile directory** fac fbr,fsi rng edg ebr,esi,edx cnd csi,cnx end nsi txt tsi,txx	end.fit enfitpid.fti enfittid.fti enfitfc.fti txt.fit txfitpid.fti txfittid.fti txfitfc.fti txfitfid.fti **xxxx\ tile directory** fac fbr,fsi rng edg ebr,esi,edx cnd csi,cnx end nsi txt tsi,txx

FIGURE 6. DTOP data library (Continued).

t101us01\		t101us04\	...	t101us10\	...	t101us15\	data library coverage
sdr\	slp\	smc\	trn\	util\	veg\	tileref\	
fcs *.aft,*.ajt *.lft,*.ljt *.pft,#.pti sdrtxt.tft #.ati,#.lti #.jti, #.nti fca,fcx char.vdt,.vdx int.vdt,.vdx fac.fit fafitpid.fti fafittid.fti fafitfc.fti fafitfid.fti edg.fit edfitpid.fti edfittid.fti edfitfc.fti edfitfid.fti end.fit enfitpid.fti enfittid.fti enfitfc.fti enfitfid.fti cnd.fit cnfitpid.fti cnfittid.fti	fcs *.aft,*.ajt #.ati #.jti fca,fcx char.vdt,.vdx int.vdt,.vdx fac.fit fafitpid.fti fafittid.fti fafitfc.fti fafitfid.fti **xxxx\ tile directory** fac fbr,fsi rng edg ebr,esi,edx cnd csi,cnx	fcs *.aft,*.ajt #.ati #.jti fca,fcx char.vdt,.vdx int.vdt,.vdx fac.fit fafitpid.fti fafittid.fti fafitfc.fti fafitfid.fti **xxxx\ tile directory** fac fbr,fsi rng edg ebr,esi,edx cnd csi,cnx	fcs *.aft,*.ajt *.lft,*.ljt *.pft,#.pti trntxt.tft #.ati,#.lti #.jti, #.nti #.tti fca,fcx char.vdt,.vdx int.vdt,.vdx railrdl.rat *.rjt,*.rax roadl.rat fac.fit fafitpid.fti fafittid.fti fafitfc.fti fafitfid.fti edg.fit edfitpid.fti edfittid.fti edfitfc.fti edfitfid.fti end.fit enfitpid.fti enfittid.fti enfitfc.fti	fcs *.aft,*.ajt *.lft,*.ljt *.pft,#.pti utiltxt.tft #.ati, #.jti, #.nti #.tti fca,fcx char.vdt,.vdx int.vdt,.vdx fac.fit fafitpid.fti fafittid.fti fafitfc.fti fafitfid.fti edg.fit edfitpid.fti edfittid.fti edfitfc.fti edfitfid.fti end.fit enfitpid.fti enfittid.fti enfitfc.fti enfitfid.fti cnd.fit cnfitpid.fti cnfittid.fti	fcs *.aft,*.ajt #.ati #.jti fca,fcx char.vdt,.vdx int.vdt,.vdx fac.fit fafitpid.fti fafittid.fti fafitfc.fti fafitfid.fti **xxxx\ tile directory** fac fbr,fsi rng edg ebr,esi,edx cnd csi,cnx	fcs tileref.aft tilereft.tft #.tti, #.ati char.vdt,.vdx fac fbr,fsi rng edg ebr,esi,edx cnd csi txt tsi,txx	tables, files, indices
						libref\	
						fcs libref.lft libreft.tft #.lti #.tti char.vdt,.vdx edg ebr,esi,edx cnd	

FIGURE 6. DTOP data library (Continued).

cnfitfc.fti cnfitfid.fti txt.fit txfitpid.fti txfittid.fti txfitfc.fti txfitfid.fti **xxxx\ tile directory** fac fbr,fsi rng edg ebr,esi,edx cnd csi,cnx end nsi txt tsi,txx			enfitfid.fti cnd.fit cnfitpid.fti cnfittid.fti cnfitfc.fti cnfitfid.fti txt.fit txfitpid.fti txfittid.fti txfitfc.fti txfitfid.fti **xxxx\ tile directory** fac fbr,fsi rng edg ebr,esi,edx cnd csi,cnx end nsi txt tsi,txx	cnfitfc.fti cnfitfid.fti txt.fit txfitpid.fti txfittid.fti txfitfc.fti txfitfid.fti **xxxx\ tile directory** fac fbr,fsi rng edg ebr,esi,edx cnd csi,cnx end nsi txt tsi,txx		csi txt tsi,txx

FIGURE 6. DTOP data library (Continued).

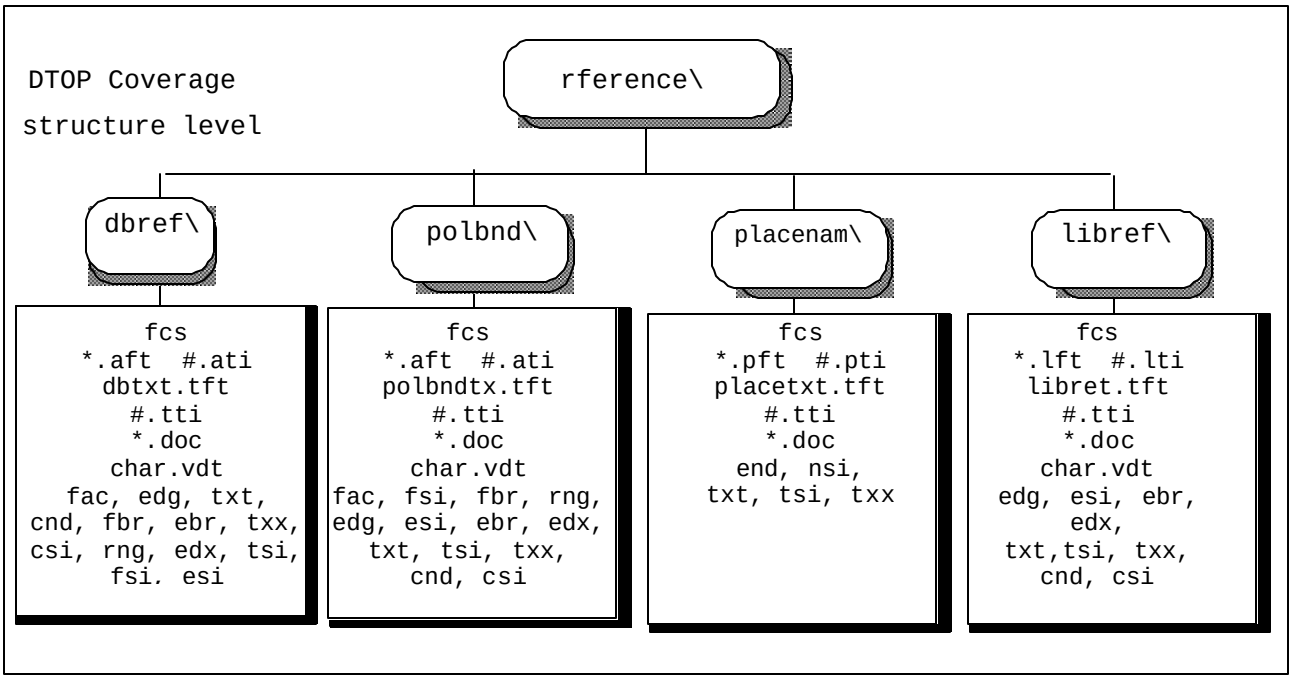

* The asterisk is replaced with the prefix of the point, node, line, or area feature class name.

\# The pound is replaced with the prefix of the thematic index name which is based on the column name to which the index refers.

FIGURE 7. DTOP Reference Library roadmap.

3.14.4.1 Coverage metadata. The metadata tables and their content will vary with each coverage as shown in TABLE 5. Each coverage directory shall contain one feature class schema table (fcs). All coverages that contain feature tables having the FACC feature code column will have a character value description table (char.vdt). If FACC coded attributes are present, the description of their values will be defined in an integer value description table (int.vdt). Other optional metadata tables include documentation tables (e.g., *.DOC) that provide data quality information in textual format pertaining to the coverage, a feature table, or an attribute column. Content and format for these tables are defined in MIL-STD-2407. Product specific information is provided in Appendixes D and E of this specification.

3.14.4.1.1 Feature class schema table. Each DTOP coverage shall contain one feature class schema table (fcs). The FCS defines the relationship between two tables, principally between a feature table and its associated primitive table within the coverage according to the primary and foreign keys of the tables. The FCS may also define relationships between feature tables and related attribute tables.

TABLE 5. DTOP coverage metadata tables and description.

<coverage name>	Directory file
fcs	Feature class schema table
FEATURE TABLES	Point, node, line, or area feature tables and indexes
char.vdt	Character value description table
int.vdt	Integer value description table
<coverage>.doc	Documentation table for a coverage
<feature class>.doc	Documentation table for a feature class
<attribute>.doc	Documentation table for an attribute within a feature class
fca	Feature class attribute table

3.14.4.1.2 Value description tables.

a. The VDTs provide descriptions (or meanings) of unique FACC attribute values contained in a feature table. A value description table may be referenced for some or all attributes in a feature table. CHAR.VDT tables provide the meanings of the FACC feature codes that are stored as a character data type. INT.VDT tables provide meanings for FACC attribute values that are represented as either short or long integers.

b. Each record in a value description table contains a feature table name, an attribute name, the attribute value, and the meaning specified for that value. Attribute names are repeated in subsequent records when multiple attribute values exist for the feature tables in a coverage. For example, the FACC attribute EXS may have 0, 1, and 2 as possible values. These values would be described in an integer value description table. In this case the integer value description table will contain three records, each containing the meaning of these values (“Unknown,” “Definite” and “Doubtful”, respectively.) The name of the value description table associated with an attribute column is indicated in the header of each feature table. The value description tables implemented in each DTOP coverage are provided in Appendix E. Only those values in the actual data will be present in the description table.

3.14.4.1.3 Feature index.

a. A feature index is created for each data coverage in the data libraries except for the Library Reference and Tile Reference coverages. This index is composed of (1) a feature class attribute table (fca) and (2) a number of feature index tables (fit). Feature index tables allow quick retrieval of feature information when given a selected primitive. There will be one FIT for each primitive type in a coverage. When a FIT is defined for a coverage, all feature classes in that coverage will be indexed. All FITs and the FCA reside within a given coverage directory.

b. The Feature Class Attribute table (see TABLE 6) will have the following columns: a feature class ID column (id), a feature class name column (fclass), the feature type (type) and a feature class description column (descr).

TABLE 6. Feature class attribute table (FCA) definition.

{Header length}L; Feature Class Attribute Table;-; id=I,1,P,Row Identifier,-,-,-,: fclass=T,8,U,Feature Class Name,-,-,-,: type=T,1,N,Feature Type,char.vdt,-,-,: descr=T,*,N,Description,-,-,-,:;			
1	markersp	P	Markers and Cairns
2	polbndl	L	Demarcation Lines
3	oasisa	A	Oases
:	:	:	:
n	n	n	n

c. Every primitive/feature reference results in one entry in the appropriate FIT for that primitive and the corresponding feature.

d. Feature Index Tables (see TABLE 7) are made up of two compound keys, the feature class ID (fc_id) and the feature ID (feature_id) to properly identify an individual geographic feature, and the tile ID (tile_id) and primitive ID (prim_id) for a primitive. Available FIT names are edg.fit, cnd.fit, end.fit, fac.fit, and txt.fit. Thematic indices are used on the primitive_id (*fitpid.fti), tile_id (*fittid.fti), fc_id (*fitfc.fti), and feature_id (*fitfid.fti) columns. The thematic index may occur only on the feature class column when two or more feature classes in the same primitive type exist or if join tables are implemented with the feature class.

TABLE 7. Format and example of content for feature index table (FIT).

{Header length}L; Feature Index Table;-; id=I,1,P,Row Identifier,-,-,-,: prim_id=I,1,N,Primitive ID,-,*fitpid.fti[1],-,: tile_id[2]=S,1,N,Tile Reference ID,-,*fittid.fti[1],-,: fc_id=I,1,N,Feature Class ID,-,*fitfc.fti[1],-,: feature_id=I,1,N,Feature Table ID,-,*fitfid.fti[1],-,:;				
1	23	1	8	1
2	189	1	4	56
3	566	4	6	787
4	76	3	5	452
:	:	:	:	:
n	n	n	n	n

[1] Sample name of index based on primitive type, where * = en for entity node, cn for connected node, ed for edge, fa for face, or tx for txt.

[2] This column is not present in untiled coverages.

3.14.4.1.4 Documentation tables.

a. Documentation (or narrative) tables provide data quality information that describes how the data were processed for a coverage. Topics can include processing tolerances, feature interpretation rules, and basic production quality assurance procedures. Three levels of documentation tables may be present in a coverage. These levels include coverage, feature class, and attribute. The presence of documentation tables will vary with each DTOP coverage.

b. <Coverage> documentation table. Each coverage may have an optional documentation table. If present, this table shall be named so that the prefix contains the same name as the coverage, and the suffix is .DOC. This table may contain information that pertains to the lineage and data quality characteristics in general for all features for the coverage.

c. <Feature class> documentation table. Any feature class table may have an associated documentation table, <feature class>.DOC, which is referenced in the feature class table header ID. Information in this table will pertain to all features in the feature class. The documentation table prefix will reflect the appropriate feature class.

d. <Attribute> documentation table. Any attribute column defined in a feature table may have an associated documentation table, <attribute>.DOC, which may be referenced in the header of the table and associated with the particular attribute column definition. This table contains information pertaining to that attribute or its values. The documentation table prefix will reflect the appropriate attribute column name. If documentation tables are created for the same attribute column in multiple feature class tables within a coverage, each will have a separate documentation file identified by a unique prefix.

3.14.4.2 Data coverages. There are up to fourteen thematic coverage directories present in any DTOP data library. Within a library, coverage directories shall not be included if data does not exist for that coverage within the library’s geographic area. The contents of each DTOP data coverage are stored in a directory whose name shall be represented in lower case letters (examples in this document are shown in capital letters) with a three to five character name representative of the thematic layer name (i.e., bnd for Boundaries coverage, trans for Transportation) as shown in Figure 6. There are three thematic coverage directories present in the DTOP reference library. The coverage directory names are shown in Figure 7.

3.14.4.3 Coverage topology. The topology level of each coverage is specified in the coverage attribute (description) table (CAT) within each library. Topology is not supported between coverages.

3.14.5 Feature class structure level.

a. A feature class is defined as a group of features sharing a homogeneous set of attributes and consists of one or more attribute tables and one or more primitive tables. These primitive tables store the spatial or geometric information defining the location of features. In tiled coverages, primitive tables are stored in subdirectories of the coverage directory. Each

coverage shall contain at least one feature class. Although a feature class is considered to be a structure level of VPF, along with the database, library, and coverage levels, feature classes are not represented as directories. Rather, the feature class level is represented by a combination of files stored at the coverage level within a given coverage directory.

b. The definition of all possible features and attributes for each feature class in a DTOP coverage is presented in Appendix E.

3.14.5.1 Feature class types. The DTOP database contains five types of feature classes as defined in MIL-STD-2407: point, node, line, area, and text. The suffixes for each feature class type are shown in TABLE 8. Point feature tables and node feature tables contain the same suffix (.pft).

TABLE 8. Feature table suffixes.

Point Feature Table	.pft
Node Feature Table	.pft
Line Feature Table	.lft
Area Feature Table	.aft
Text Feature Table	.tft

3.14.5.2 Feature class/feature table names. Feature class names and descriptions are product specific. Feature class names are shown in TABLE 9 for DTOP thematic coverages.

3.14.5.3 Number of feature classes. The complete set of possible feature classes within each coverage is described in this specification; however, only those feature classes containing data shall be present in a coverage. The presence or absence of a feature class depends upon data content and availability.

3.14.5.4 Text feature class. A text feature class is composed of a text feature table (tft) and a text primitive (txt) table. This primitive table contains information that may be used to replicate text strings found on an original TLM map sheet or other source for representation on a plot or digital display. All text (both at the feature and primitive level) will be limited to the characters found in the Latin alphabet primary code table, Figure 24 of the MIL-STD-2407.

TABLE 9. DTOP thematic coverages and feature classes.

Coverage name	Feature classes Point	Node	Line	Area	Text
bch				beacha	
bnd	elevp markersp oasisp	markersc	coastl polbndl	bndvoida oasisa polbnda	bndtxt
dq			dqline	dqarea dqvoida	dqtxt
hydro	dangerp wellp		reefl seastrtl	coasta dangera hydvoida seastrta	hydrotxt
ind	agstorep cisternp extractp obstrp processp rigwellp storagep towerp		indl	agstorea disposea extracta indvoida nucleara processa storagea stockyda	indtxt
obs			misobsl obsline obsmanl obsmandl	misobsa obsvoida teetha	
phys	cavep lndfrmp thermalp		lndfrml	asphalta landicea lndfrm1a lndfrm2a phyvoida seaicea	phystxt
pop	buildp fortp landmrkp mispopp ruinsp		buildl landmrkl	builda builtupa forta landmrka mobilea plazaa popvoida ruinsa sporta	poptxt
slp				pchanela pwatera slpolya slpvoida	

TABLE 9. DTOP thematic coverages and feature classes (continued).

smc				sbuiltua schanela smvoida soila swatera	
sdr	damlockp intakep springp	damlockc rapidsc sdrnode springc	chanell daml fordl misdrl penstkl rapidsl	chanela damlocka lakeresa misdra sdrvoida watera	sdrtxt
trans	aerofacp harborp misaerop	bridgec contric ferryc fordc mtnpssc rrturnc steepc tunnelc	bridgel ferryl fordl harborl liftl railrdl roadl trackl traill tunnell	aerofaca harbora resta rryarda runwaya storveha travoida	transtxt
util	commp pumpingp solarp substatp	commc cxpipec utilnode	pipel powerl telel	comma utilarea utivoida	utiltxt
veg				barrena cropa grassa treesa vbuiltua vchanela vwatera vegvoida	

3.14.5.5 Feature table structure and contents. All feature tables (in tiled coverages) have the same structure. Each contains a row identifier column (or ID) followed by an “F_CODE” attribute column. The F_CODE field for each record contains a five-character FACC code value. The heading of subsequent attribute columns, if present, is a three-character FACC attribute code. The attribute fields for each record will contain representative values for the corresponding F_CODE. Following the last FACC attribute code column there is a TILE_ID column. This column contains the row ID of the tile reference area feature table record where the tile path name is stored and references the location of a primitive table. The last column in every feature table is a primitive identifier column which contains primitive record

identifier for the feature record. This column is identified as *_ID (the * is replaced with the END, CND, EDG, FAC, or TXT primitive table name). Sample point, node, line, area, and text feature tables are presented in TABLES 10 to 14.

TABLE 10. Format and example of content for a tiled point feature table (lndfrmp.pft).

```
{Header length}L;
Landform Point Feature Table;-;
id=I,1,P,Row Identifier,-,-,-,:
f_code=T,5,N,FACC Feature Code,char.vdt,f_code1.pti,-,:
hgt=S,1,N,Height Above Surface Level(meters),int.vdt,-,-,:
mcc=S,1,N,Material Composition Category,int.vdt,-,-,:
rkf=S,1,N,Rock Formation Type,int.vdt,-,-,:
tile_id[1]=S,1,N,Tile Reference ID,-,tile1_id.pti,-,:
end_id=I,1,N,Entity Node Primitive ID,-,end1_id.pti,-,:;
```

1	BJ060	66	103	-32768	1	1
2	DB160	88	-32768	3	2	2
:	:	:	:	:	:	:
n	n	n	n	n	n	n

[1]This column will not be present for untiled point feature tables.

TABLE 11. Format and example of content for a tiled node feature table (springc.pft).

```
{Header length}L;
Spring Node Feature Table;-;
id=I,1,P,Row Identifier,-,-,-,:
f_code=T,5,N,FACC Feature Code,char.vdt,-,-,:
hyc=S,1,N,Hydrological Category,int.vdt,-,-,:
scc=S,1,N,Spring/Well Characteristic Category,int.vdt,-,-,:
ywq=S,1,N,Water Quality Attribute,int.vdt,-,-,:
tile_id[1]=S,1,N,Tile Reference ID,-,tile3_id.nti,-,:
cnd_id=I,1,N,Connected Node Primitive ID,-,cnd3_id.nti,-,:;
```

1	BH170	8	9	0	1	1
:	:	:	:	:	:	:
n	n	n	n	n	n	n

[1]This column will not be present for untiled node feature tables.

TABLE 12. Format and example content for a tiled line feature table (lndfrml.lft).

```
{Header length}L;
Landform Line Feature Table;-;
id=I,1,P,Row Identifier,-,-,-,:
f_code=T,5,N,FACC Feature Code,char.vdt,-,-,:
mcc=S,1,N,Materials Composition Category,int.vdt,-,-,:
nam=T,*,N,Name,char.vdt,-,-,:
wid=S,1,N,Width (meters),int.vdt,-,-,:
tile_id[1]=S,1,N,Tile Reference ID,-,tile1_id.lti,-,:
edg_id[2]=I,1,N,Edge Primitive ID,-,edg1_id.lti,-,:;
```

1	DB060	103	Fritz	30	1	1
:	:	:	:	:	:	:
n	n	n	n	n	n	n

[1]This column will not be present for untiled line feature tables or if join table is implemented and is tiled.
[2]This column will not be present, if line join table is implemented.

TABLE 13. Format and example content for a tiled area feature table (lndfrm1a.aft).

```
{Header length}L;
Landform 1 Area Feature Table;-;
id=I,1,P,Row Identifier,-,-,-,:
f_code=T,5,N,FACC Feature Code,char.vdt,f_code5.ati,-,:
feo=S,1,N,Feature Element Orientation,int.vdt,-,-,:
ssc=S,1,N,Structure Shape Category,int.vdt,-,-,:
tile_id[1]=S,1,N,Tile Reference ID,-,tile5_id.ati,-,:
fac_id[2]=I,1,N,Face Primitive ID,-,fac5_id.ati,-,:;
```

1	BH160	-32768	-32768	1	2
2	BH150	-32768	-32768	2	3
3	DB170	45	26	3	4
:	:	:	:	:	:
n	n	n	n	n	n

[1]This column will not be present for untiled area feature tables.
[2]This column will not be present, if area join table is implemented.

TABLE 14. Format and example of content for a tiled text feature table (hydrotxt.tft).

{Header length}L;			
Hydrography Text Feature Table;-;			
id=I,1,P,Row Identifier,-,-,-,:			
f_code=T,5,N,FACC Feature Code,-,f_code.tti,-,:			
tile_id[1]=S,1,N,Tile Reference ID,-,tile_id.tti,-,:			
txt_id=I,1,N,Text Primitive ID,-,txt_id.tti,-,:;			
1	ZD040	1	23
2	ZD045	2	45
:	:	:	:
n	n	n	n

[1]This column will not be present for untiled text feature tables.

3.14.6 Primitive Tables and associated files.

a. VPF uses primitive tables to model a feature's location, geometry and topology as defined in MIL-STD-2407. DTOP implements four geometric primitive types and one cartographic primitive (TABLE 15).

TABLE 15. Primitive Table and associated files.

Primitive	**File Names**	**Table Description**
Edge table	esi	Edge spatial index file
	ebr	Edge bounding rectangle table
	edx	Edge variable-length index file
	edg	Edge primitive table
Face table	fsi	Face spatial index file
	fbr	Face bounding rectangle table
	fac	Face primitive table
	rng	Ring table
Entity node table	nsi	Entity node spatial index file
	end	Entity node primitive table
Connected node table	csi	Connected node spatial index file
	cnx	Connected node variable-length index file
	cnd	Connected node primitive table
Text table	tsi	Text spatial index file
	txx	Text variable-length index file
	txt	Text primitive table

b. The primitive tables contained in any coverage are dependent on the feature classes present in that coverage. The foreign key columns contained in the primitive tables shall be tailored to the coverages' actual topology level. For coverages with level 2 topology, entity node tables will not have a containing face column, and edge tables will not have left and right face columns. Example DTOP primitive tables are shown in TABLES 16 through 20.

TABLE 16. Format and example of content for entity node primitive table (END).

{Header length}L;		
Entity Node Primitive Table;-;		
id=I,1,P,Row Identifier,-,-,-,:		
containing_face[1]=I,1,N,Foreign Key to Face Table,-,-,-,:		
coordinate=Z/C,1,N,Coordinates of Entity Node,-,-,-,:;[2]		
1	2	-7.893952 43.774712 234.200000
2	3	-7.893897 43.773613 235.600000
3	4	-7.843663 43.768391 223.700000
:	:	:
n	n	x.xxxxxx y.yyyyyy z.zzzzzz

Note: The ".pft_id" is carried by the associated feature index table, see Table 7.
[1] The CONTAINING_FACE column is present only for coverages of level 3 topology.
[2] C-coordinate (2D) will be implemented for reference coverages for both data and reference libraries and data quality coverage instead of 3D. An additional column (*.pft_id) for a feature pointer will be present for untiled reference coverages, where '*' represents the feature class name.

TABLE 17. Format and example of content for connected node primitive table (CND).

{Header length}L;		
Connected Node Primitive Table;-;		
id=I,1,P,Row Identifier,-,-,-,:		
first_edge=I/K[2],1,N,Foreign Key to Edge Table,-,-,-,:		
coordinate=Z/C,1,N,Coordinates of Connected Node,-,-,-,:;[3]		
1	2	7.893952 43.774712 45.700000
2	3	7.893897 43.773613 47.900000
3	4	7.843663 43.768391 45.200000
:	:	:
n	n	x.xxxxxx y.yyyyyy z.zzzzzz

Note: The ".pft_id" is carried with the associated feature index table, see Table 7.
[2] Column type "K" is implimented for coverages that are tiled. For untiled coverages, the column type is defined as "I".
[3] C-coordinate (2D) will be implemented for reference coverages for both data andreference libraries and data quality coverage instead of 3D.

TABLE 18. Format and example of content for edge (EDG) primitive table.

{Header length}L; Edge Primitive Table;-; id=I,1,P,Row Identifier,-,-,-,: start_node=I,1,N,Start/Left Node,-,-,-,: end_node=I,1,N,End/Right Node,-,-,-,: right_face[1]=I/K[2],1,N,Right Face,-,-,-,: left_face[1]=I/K[2],1,N,Left Face,-,-,-,: right_edge=I/K[2],1,N,Right Edge from End Node,-,-,-,: left_edge=I/K[2],1,N,Left Edge from Start Node,-,-,-,: coordinates=Z/C,*,N,Coordinates of Edge,-,-,-:;[3]							
1	1	2	6 260 210	1 0 0	29 196 14	26 12 18	-10.00 45.00 9.90
2	3	5	5 0 0	8 260 214	30 198 12	76 52 48	-7.70 43.69 9.50 -7.80 43.70 10.69 -7.90 43.80 9.96
:	:	:	:	:	:	:	:
n	n	n	n n n	n n n	n n n	n n n	x.xxxxxx y.yyyyyy z.zzzzzz

Note: The ".lft_id" is associated with the feature index table, see Table 7.

[1] The RIGHT_FACE and LEFT_FACE columns are required only for coverages with level 3 topology.

[2] Column type "K" is implimented for coverages that are tiled. For untiled coverages, the column type is defined as "I".

[3] C-coordinate (2D) will be implemented for reference coverages for both data and reference libraries and data quality coverage instead of 3D.

An additional column (*.lft_id) for a feature pointer will be present for untiled reference coverages, where '*' represents feature class name.

TABLE 19. Format and example of content for face (FAC) primitive table.

{Header length}L; Face Primitive Table;-; id=I,1,P,Row Identifier,-,-,-,: ring_ptr=I,1,N,Foreign Key to Ring Table,-,-,-,:;	
1	1
2	13
3	14
:	:
n	n

Note: The ".aft_id" is carried with the associated feature index table, see

Table 7. An additional column (*.aft_id) for a feature pointer will be present for untiled reference coverages, where '*' represents feature class name.

TABLE 20. Format and example of content for text (TXT) primitive table.

{Header length}L; Text Primitive Table;-; id=I,1,P,Row Identifier,-,-,-,: string=T,*,N,Text String,-,-,-,: shape_line=C,*,N,Shape of Text String,-,-,-,:;		
1	Nolanville	-5.811609 43.662006
2	Killeen	-8.574136 43.435287
3	Harker Heights	-7.437326 42.881957
4	Wainwright Heights	-6.835582 40.736553
:	:	:
n	n	n

c. Other files that are implemented by VPF to support primitive tables include ring tables, spatial indexes, thematic indexes, variable-length indexes and bounding rectangle tables. Examples are shown in TABLES 21 and 22. The format for spatial and variable-length index tables is provided in section 3.12.3.

TABLE 21. Format and example of content for ring (RNG) table.

{Header length}L; Ring Table;-; id=I,1,P,Row Identifier,-,-,-,: face_id=I,1,N,Foreign Key to Face Table,-,-,-,: start_edge=I,1,N,Foreign Key to Edge Table,-,-,-,:;		
1	1	2
2	2	47
3	2	51
:	:	:
n	n	n

TABLE 22. Format and example of content for bounding rectangle tables (fbr or ebr).

{Header length}L; Bounding Rectangle Table;-; id=I,1,P,Row Identifier,-,-,-,: xmin=F,1,N,Minimum X Coordinate,-,-,-,: ymin=F,1,N,Minimum Y Coordinate,-,-,-,: xmax=F,1,N,Maximum X Coordinate,-,-,-,: ymax=F,1,N,Maximum Y Coordinate,-,-,-,:;				
1	-76.333359	36.916660	-76.250031	36.999981
2	-76.333359	36.999451	-76.331215	36.999981
3	-76.333359	36.994431	-76.321991	36.999981
:	:	:	:	:
n	n	n	n	n

3.15 DTOP tiling schemes.

a. As stated in 3.14.2, the TILEREF coverage defines the tiling scheme for each DTOP library. The tiling schemes for DTOP libraries will differ in their spatial extent and number of tiles per library. The tiling scheme for each library implements pairs of alphanumeric characters to represent the coordinate positions of the tiles. DTOP libraries shall be partitioned in a systematic tile structure based upon the Geographic Reference System (GEOREF).

b. All thematic coverages in a library share the same tiling structure and coordinate system. Although a coverage is said to be tiled, tiling of data actually occurs at the primitive level. This ensures that all feature tables are stored intact directly under the coverage directory. For tiled coverages, primitive tables are organized on the basis of physical tile partitions. Tile directories are located under coverage directories such that the primitive tables are subdivided in a hierarchy of directories and are stored under the last tile directory. A representation of the table and file organization for DTOP tiled primitive tables and files is depicted in FIGURE 9.

3.15.1 DTOP tiling scheme. The DTOP database will contain data in variable sized tiles based on the GEOREF reference system as defined in the TILEREF of each library. Tiling scheme for 15 minutes by 15 minutes tiles is illustrated in this section. Typically, 15 minutes by 15 minutes tiles will be used; however, the tiling scheme will change by library in the northern and southern latitudinal parts of the world. For example, a 30 minutes by 30 minutes tiling scheme will be used in northern Alaska.

3.15.1.1 DTOP tile directory hierarchy. The primitive tables for each DTOP coverage are partitioned among tile directories that are ordered in a three-tier hierarchy based on the GEOREF naming convention. The first, second, and third tier subdirectories contain only pointers to the fourth subdirectory, where all primitive tables are stored. The tiling scheme may be viewed as pairs of letters and numbers which represent the standard GEOREF cells.

3.15.1.2 Tile directory description and naming.

a. The first pair of letters represents the coarsest, 15° by 15° standard GEOREF division, and represents the first coordinate pair identifying the tile name. This pair of letters also represents the first directory tiers of the tiling scheme. The first letter represents the southwest coordinate in the x direction (longitude). There are a maximum of 24 characters from A to Z (omitting I and O) according to the 15° bands of GEOREF longitude zones. The second letter represents the southwest coordinate in the y direction (latitude). There are a maximum of 12 characters lettered from A to M (omitting I) according to the 15° GEOREF latitude zones for a total of 288 15° by 15° cells or 288 subdirectories globally. (See Figures 8 & 9)

b. The second pair of letters represents the 1° by 1° standard GEOREF divisions, and represents the second coordinate pair of the tile name. This pair of letters also represents the second and third directory tiers of the tiling scheme. The first letter represents the x coordinate (longitude) of

the southwest corner of the tile. There are a maximum of 15 subdirectories lettered from A to Q (omitting I and O) according to the 1° bands of GEOREF longitude zones. The second letter represents the y coordinate (latitude) of the southwest corner of the tile. There are a maximum of 15 subdirectories lettered from A to Q (omitting I and O) according to the 1° bands of GEOREF latitude zones. These letters partition each 15° by 15° GEOREF cell into a total of 225 1° by 1° cells. (See Figures 8 & 9)

c. The third pair of numbers represents a GEOREF coordinate for the southwest corner of the tile. The coordinates are equivalent to arc minute values. These numbers use the GEOREF concept to represent this division. This pair of numbers also represents the fourth directory tier of the tiling scheme. The first number in the pair represents the x coordinate (longitude) of the southwest corner of the tile. The second number represents the y coordinate (latitude) of the southwest corner of the tile. Note that the x and y GEOREF coordinates are always positive, increasing from the southwest corner (origin) of the 1° by 1° cell. Therefore, in the western hemisphere, this x value is the “inverse” of the geographic longitude. Similarly in the southern hemisphere, the y value is the “inverse” of the latitude value. For example, the 15’ by 15’ tile name (and directory name) containing data located at 90°45’ west longitude and 31°00’ north latitude is fj\q\b\t1500 (FIGURES 8, 9, and 10). The letter ‘t’ represents DTOP, this is needed as required by MIL-STD-2407, since a numerical value is invalid as a beginning character of a subdirectory.

3.15.2 Cross-tile topology. Cross-tile topology ensures that topology is retained between the primitive tables across the tile boundaries. Topology across the tiles is maintained through the use of a reference tile ID in the edge primitive table that establishes a “cross-tile” link over the tile partitions. This enables the database to function as a seamless unit for analysis purposes.

3.16 Naming conventions. TABLE 23 provides the naming conventions for the table extensions or table names for the following: feature table extensions, primitive table names, thematic index extensions, spatial index file names, variable-length index extensions.

TABLE 23. Naming conventions for DTOP tables and files.

Table or File Type	**Area**	**Line**	**Point**	**Node**	**Text**
Feature Table	aft	lft	pft	pft	tft
Primitive Table	fac	edg	end	cnd	txt
Thematic Index	ati	lti	pti	nti	tti
Spatial Index	fsi	esi	nsi	csi	tsi
Variable-length Index	afx	lfx	pfx	pfx	txx

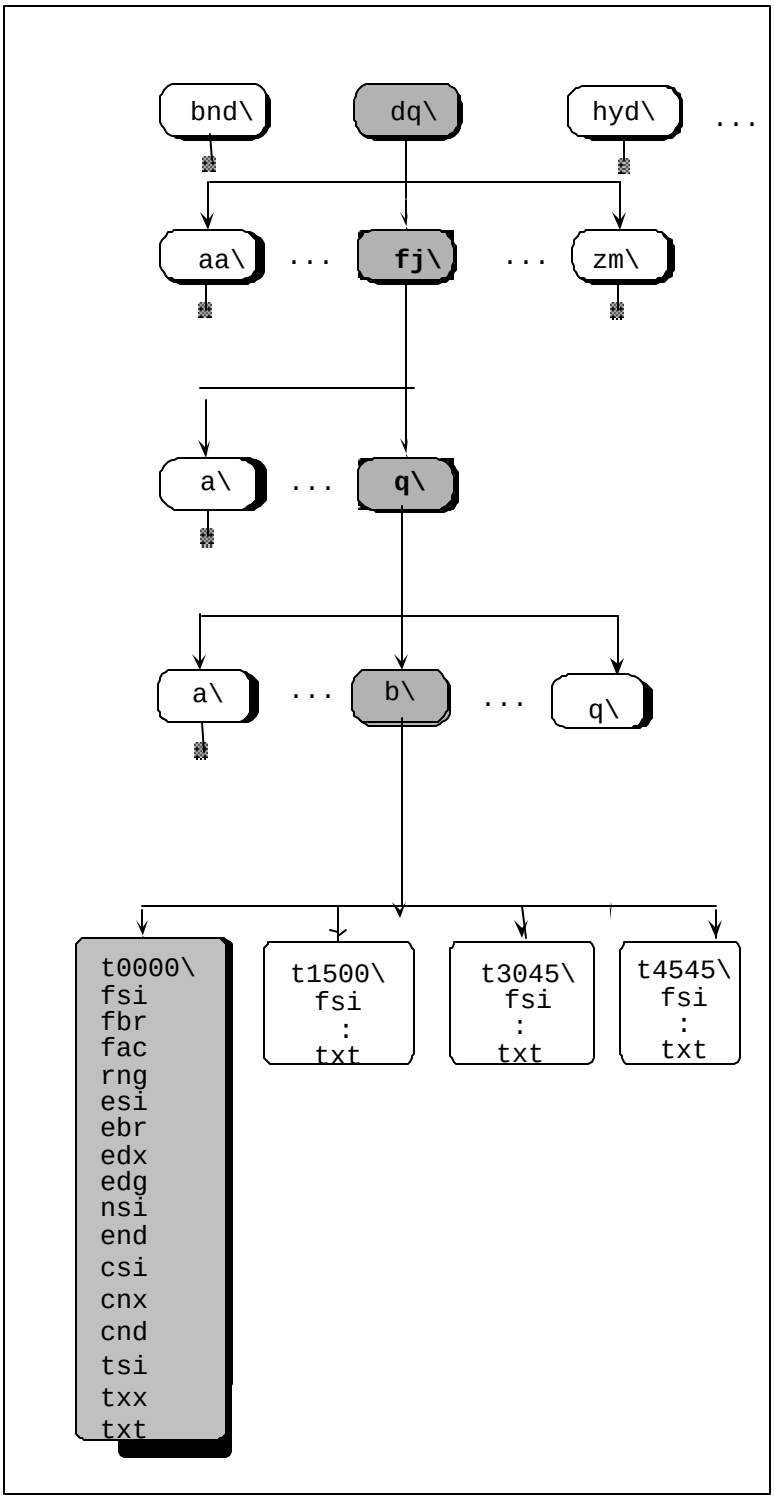

DTOP Coverage Directories

First partition of 24 tile lettered A to Z (15° bands of GEOREF longitude zones) and 12 tile lettered a to m (15° GEOREF latitude zones.

Second partition of tile subdirectories lettered A to Q (divides the 15° longitude zones into 15 1° GEOREF longitude zones)

Third partition of tile subdirectories lettered A to Q (divides the 15° longitude zones into 15 1° GEOREF latitude zones)

Fourth partition of 16 tile subdirectories numbered t0000 to t4545 (divides the 1° by 1° GEOREF zones into 16 15' by 15' cells)

FIGURE 8. DTOP tile directory hierarchy.

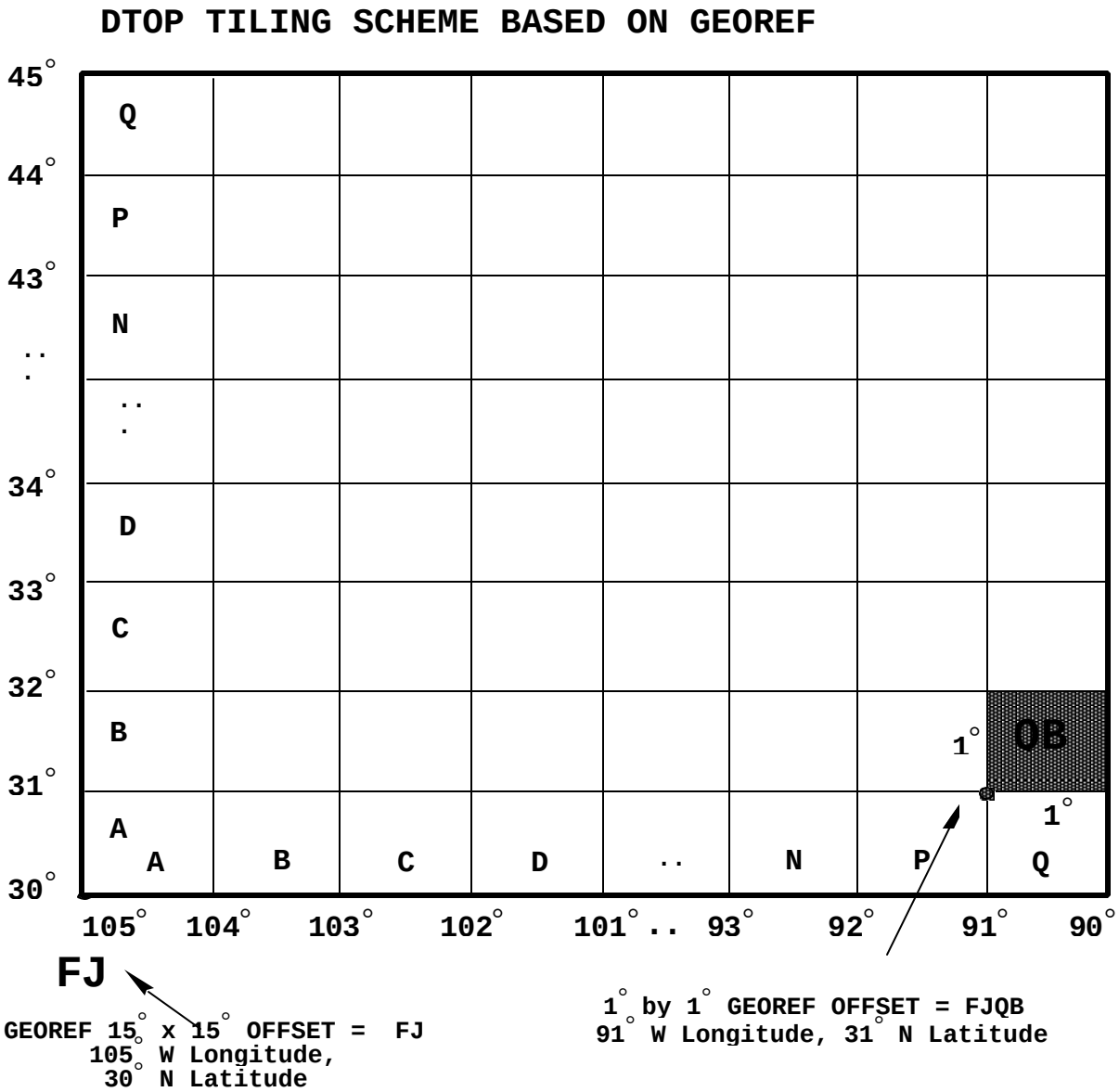

FIGURE 9. Coordinates for a 15° by 15° cell of GEOREF system (FJ).

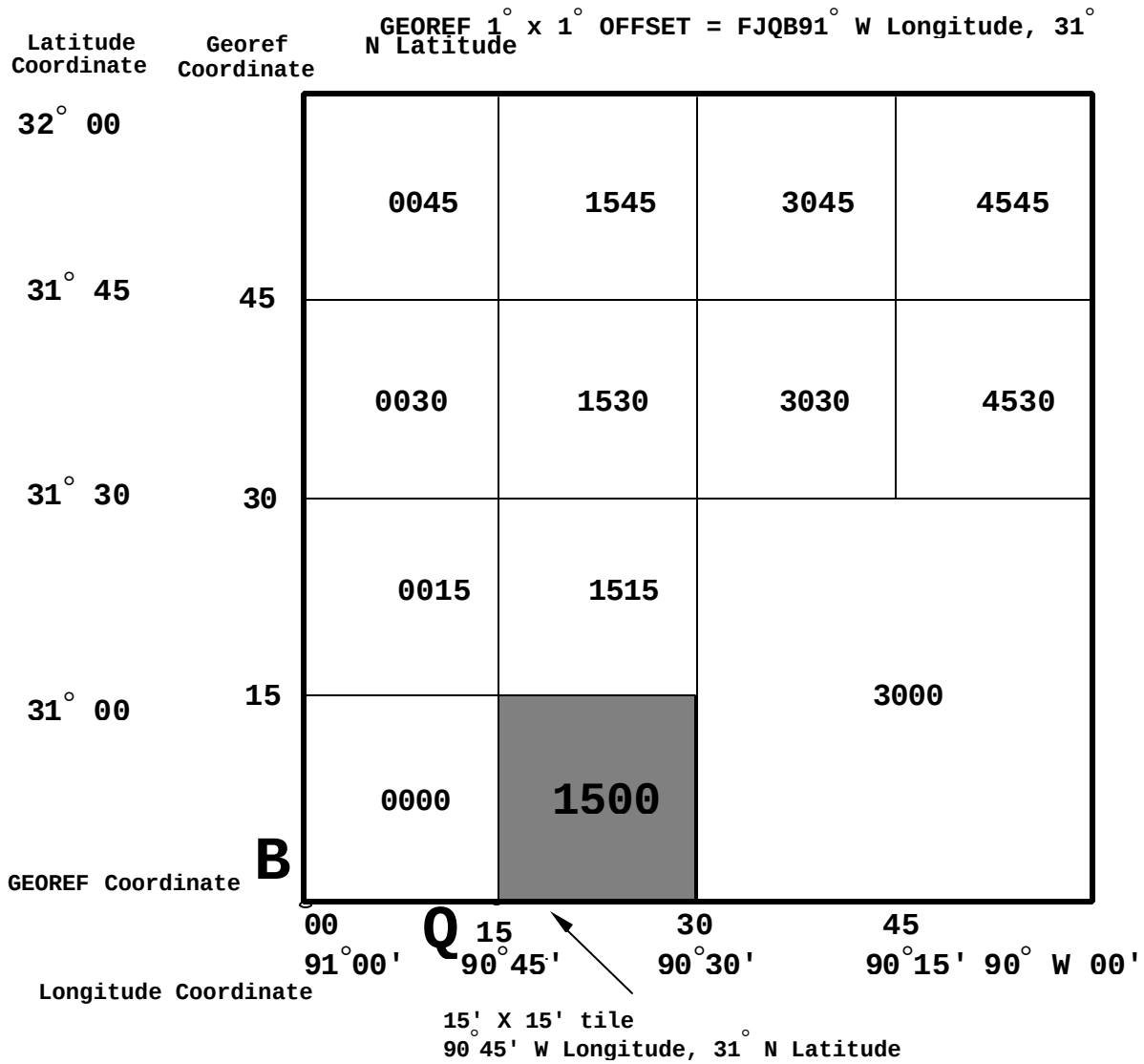

FIGURE 10. Example of coordinates for GEOREF 1° by 1° cell (FJQB) for identifying DTOP tiles (fjqbt1500).

3.17 Distribution medium. All VPF based products, including DTOP, shall be distributed on CD-ROM disc implementing ISO 9660 for CD-ROM formatting.

3.18 CD-ROM labeling and packaging. General CD-ROM labeling, labeling on the cardboard sleeve, or jewel case liner/information booklet, as applicable, shall be as specified in the contract (see 5.1). Items specific to DTOP are shown below.

3.18.1 CD labeling. Labeling of the DTOP CDs shall be in accordance with contract guidance.

3.18.1.1 Specific DTOP labeling items.

a. Product Logo: DTOP CDs shall show the VPF logo.

b. Product Description: Digital Topographic Data (DTOP)

c. Series: DTOP

d. Item: The NIMA item name/number.

e. Edition: Three digit edition number with left filled zeroes

f. National Stock Number: Assigned as per MIL-STD-2414.

3.18.1.2 Volume identifier. This should be identical to the eleven characters of the Volume Identifier (first eleven characters of the ISO 9660 Volume Identifier (32 characters available)) written on the header of the disk (see MIL-HDBK-9660).

3.18.2 Information booklet. Information booklets shall be provided for DTOP CDs. Labeling of the DTOP information booklet covers shall be in accordance with contract guidance. When used in conjunction with the jewel case, the front cover of the information booklet also serves as the front cover of the case.

3.18.2.1 Information booklet DTOP specific items. All information booklet DTOP specific items are the same as those shown on the CD, see 3.18.1.1.

3.18.2.2 Information booklet text. The interior pages of the information booklet shall contain the following statements (note that type should be such that all fit within the two inner surfaces of the booklet):

Digital Topographic Data (DTOP)

1. Introduction: DTOP is a vector-based digital product that portrays selected military geographic information containing features of topographic and tactical military significance. These features are defined in the 1:50,000 Scale Topographic Maps of Foreign Areas (often referred to as Topographic Line Maps or TLMs) and Tactical Terrain Analysis Data Base (TTADB) specifications, MIL-T-89301 and MIL-T-89304 respectively. The features, attributes, and attribute values presented herein are a subset of those allowed in National Imagery and Mapping Agency (NIMA) Vector Product Format (VPF) based products.

2. Purpose: DTOP is designed to provide tactical level coverage of mostly photogrammetrically derived features to support both the information contained within TLM files and Terrain Analysis and tactical military Geographic Information Systems (GIS) applications for selected geographic areas. As such, it provides a capability to display a map background, as well as terrain analysis information that is critical to planning and executing joint operations involving close air support missions, logistical operations, and land combat. Through synthesization of Tactical Decision Aids (TDAs),

DTOP will support a variety of military and environmental tasks from terrain visualization to site planning. This vector product is used with Digital Terrain Elevation Data (DTED) in many topographic and terrain analysis functions.

3. Specifications and Standards: This DTOP Compact Disc - Read Only Memory (CD-ROM) was produced under NIMA Specification, MIL-PRF-89037A, Performance Specification Digital Topographic Data (DTOP), 1 August 2002. It is formatted as specified in DoD Standard, MIL-STD-2407, Vector Product Format (VPF) and coded as per edition 1.2, January 1994, of the Digital Geographic Information Exchange Standard (DIGEST), Part 4, Feature and Attribute Coding Catalogue (FACC).

4. Datum and Projection:

Horizontal datum: World Geodetic System 1984 (WGS 84).
Vertical datum: Mean Sea Level (MSL).
Projection: Not Applicable.

5. DTOP Content: These DTOP files are equivalent to a combination of the feature, attribute, and value content of the 1:50,000 and 1:100,000 scale TLM and TTADB hardcopy overlays. All DTOP product features, attributes, and values are individually organized into a data library of single subject thematic layers/coverages. These consist of Beach, Boundaries, Hydrography, Industry, Obstacles, Physiography, Population, Slope/Surface Configuration, Soil/Surface Materials, Surface Drainage, Transportation, Utilities, and Vegetation, along with data supporting coverages of Library Reference, Tile Reference, and Data Quality. Thus, DTOP feature, attribute, and value content is mostly consistent with associated hardcopy TLM and TTADB products.

6. Comments and Questions: For questions concerning this or other NIMA products or services, please telephone the NIMA Customer Help Desk: 1-800-455-0899, Commercial 314-260-1236, or DSN 490-1236, or write: Director, National Imagery and Mapping Agency, ATTN: Analysis and Production Directorate (P), Mail Stop D-134, Bethesda, MD 20816-5003.

3.18.3 Jewel case liner (back cover of case). Labeling of the DTOP jewel case liner shall be in accordance with contract guidance.

3.18.4 Cardboard sleeve mailer. If a cardboard mailing sleeve is specified in the contract, it shall be labeled in accordance with contract guidance.

3.18.5 Bar coding on CD-ROM cases. The National Stock Number (NSN) bar code, NIMA Reference Number, and edition/effective date on the front of the CD-ROM case shall be shown in accordance with contract guidance, and MIL-STD-2414.

3.19 CD ROM Packaging.

3.19.1 Packaging container. The outer container shall be used to distribute and store VPF based product materials. The outer container shall consist of a cushioned plastic. The database name and a bar code shall be present on the outer container. The entire outer container shall be shrink-wrapped prior to shipping.

3.19.2 Package information. A packing list shall be included in the product package to notify a user of the contents of the VPF based data.

3.19.3 Installation instructions. Installation instructions shall be provided on a separate sheet in the package, or as part of the jewel case insert.

4. VERIFICATION

4.1 Classification of inspection. The inspection requirements specified herein are classified as follows:

a. First article inspection (see 4.2)

b. Conformance inspection (see 4.3)

4.2 First article inspection. When a first article inspection is required (see 3.1), the product shall be examined as specified in 4.3.1, and the construction record reviewed for compliance with 4.3.2 and 4.3.3.

4.3 Conformance inspection. Conformance inspection shall include the examinations of 4.3.1, 4.3.2 and 4.3.3.

4.3.1 Review of data extraction records. Records relevant to the data extraction shall be maintained. The records shall document sources, decisions regarding reconciliation of conflicting data, etc. Records shall be reviewed concurrently with visual examinations (see 4.3.2) to ensure that proper cartographic procedures have been followed.

4.3.2 Visual review. The digital data shall be examined for defects and errors as specified by the contract or Government. Any defects or errors detected shall be corrected. Defects detected during the inspection of the digital file shall be evaluated by NIMA for criticality, and suitable corrective action.

4.3.3 VPF compliance. Data shall be inspected for conformance to the product specifications in accordance with NIMA quality control procedures. The inspection shall also verify compliance of the data format per MIL-STD-2407. Defects detected during the inspection of the digital file shall be evaluated by NIMA for criticality, and suitable corrective action.

5. PACKAGING

5.1 Packaging. For acquisitions purposes, the packaging requirements shall be as specified in the contract or order (see 6.2). When actual packaging of material is to be performed by DoD personnel, these personnel shall contact the responsible packaging activity to ascertain requisite packaging requirements. Packaging requirements are maintained by the Inventory Control Point's packaging activity within the Military Department or Defense Agency, or within the Military Department's Systems Command. Packaging data retrieval is available from the managing Military Department's

or Defense Agency's automated packaging files, CD-ROM products, or by contacting the responsible packaging activity.

6. NOTES

(This section contains information of a general or explanatory nature that may be helpful, but is not mandatory.)

6.1 Intended use.

6.1.1 General usage. The DTOP is a militarily unique product developed to satisfy the armed services short and mid-term requirements for tactical digital geospatial data, for which there are no comparable commercial specifications. As such, it meets the armed services requirements for digital terrain analysis data, with a map background display, on CD-ROM to support tactical military and C^3I GIS systems, emphasizing use among ground forces. When this data set is used in conjunction with other components (elevation and imagery), it provides an unprecedented tactical level view and analysis capability of the mission space. It is also intended for use as a high resolution, general purpose database which can support a variety of other GIS applications at a tactical level, such as basic engineering and environmental analysis over selected geographic areas.

6.1.1.1 Sources. The feature content of DTOP, as defined in this specification, is primarily based on a combination of the hardcopy Topographic Line Map (TLM, MIL-T-89301A) and the Tactical Terrain Analysis Data Base (TTADB, MIL-T-89304) products generated by NIMA and co-producers. DTOP is a unique product that digitally replaces the hardcopy TTADB and its associated softcopy ITD and VITD products. Sources used in the compilation of this product may include information derived from (but not limited to) aerial photography, multi-spectral imagery, topographic maps, soil surveys, hydrographic studies, land use inventories, and transportation reports. Information also may have been derived from hardcopy TTADBs at a scale of 1:50,000 or 1:100,000 or conversion from either ITD in Standard Linear Format (SLF) or VITD in VPF.

6.1.1.2 DTOP organization. TTADB, ITD, and VITD are all individually organized into single subject thematic overlays or files. Similarly, the data content of DTOP also is organized into single subject thematic layers or coverages. These consist of: Beach (bch), Boundaries (bnd), Hydrography (hydro), Industry (ind), Obstacles (obs), Physiography (phys), Population (pop), Slope/Surface Configuration (slp), Soil/Surface Materials (smc), Surface Drainage (sdr), Transportation (trans), Utilities (util), and Vegetation (veg), with special coverages of Library Reference, Tile Reference, and Data Quality. Thus DTOP feature and attribute content is consistent with associated hardcopy TLM and TTADB products. The inclusion of most of the TLM features, allows DTOP users to add map background to both standardized and unique Terrain Analysis type overlay and synthesized product displays. Based on its data collection density, if DTOP data is to be output in hardcopy form, the appropriate scale for this output is at 1:50,000 or 1:100,000. The geographic extent of the DTOP covers only selectively dispersed areas of the world.

6.1.2 Analysis limitation. The analytical use of DTOP data at a scale greater than 1:50,000 may be limited as the result of source material used in collection.

6.2 Acquisition requirements. Acquisition documents must specify the following:

a. Title, number and date of this specification.

b. Issue of the DoDISS to be cited in the solicitation, and if required, the specific issue of individual documents referenced (see 2.2.1 and 2.3).

c. When a first article is required (see 3.1 and 4.2).

d. Packaging requirements (see 5.1).

6.3 Supersession. These interim specifications, Performance Specification Digital Topographic Data (DTOP), MIL-PRF-89037A, 1 August 2002, supersede all earlier versions thereof (all draft).

6.4 Definitions. Refer to MIL-STD-2407 for definition of terms used in this specification that are not defined below.

6.4.1 Absolute horizontal accuracy. This represents the difference between the recorded horizontal coordinates of features and their true positions with respect to the World Geodetic System (WGS). Absolute horizontal accuracy is expressed as a circular error at 90 percent probability (.9p).

6.4.2 Absolute vertical accuracy. This represents the difference between an assigned elevation and the true elevation at a specific point. In this comparison, both elevations must be referenced to the same vertical datum. Absolute vertical accuracy is expressed as a linear error at 90 percent probability (.9p).

6.4.3 Circular error (CE). An accuracy figure representing the stated percentage of probability that any point expressed as a function of two linear components (e.g., horizontal position) will be within the given figure.

6.4.4 Linear error (LE). A one dimensional error (such as an error in elevation) defined by the normal distribution function.

6.4.5 TTADB. The Tactical Terrain Analysis Data Base (TTADB) is a 1:50,000 scale geographic information system type data base consisting of a set of selected single subject thematic terrain information overlays used to satisfy tactical military requirements. Data on the physical, biological, and cultural features of the Earth's surface is presented in a hard copy cartographic format.

6.4.6 TLM. The Topographic Line Map is the standard worldwide topographic hardcopy map produced by NIMA and its coproducers for ground use by the armed services. It shows basic natural and man-made land use cover,

cultural features of importance, including most transportation features and buildings and urban areas. Relief and terrain form is represented by the use of contour lines and spot heights. Any other natural or man-made feature considered to be of landmark importance is also included.

6.4.7 Abbreviations and acronyms.

BCH	Beach (coverage name)
BND	Boundaries (coverage name)
C^3I	Command, Control, Communications, and Intelligence
CD-ROM	Compact Disc-Read Only Memory
CE	Circular Error
DESCR	Feature Class Description
DGIWG	Digital Geographic Information Working Group
DIGEST	Digital Geographic Information Exchange Standard
DMA	Defense Mapping Agency (now National Imagery and Mapping Agency [NIMA])
DoD	Department of Defense
DoDISS	Department of Defense Index of Specifications and Standards
DQ	Data Quality
DTOP	Digital Topographic Data
FACC	Feature and Attribute Coding Catalogue
FIPS PUB	Federal Information Processing Standards Publication
GEOREF	World Geographic Reference System
GIS	Geographic Information System
GOB	Ground Obstacles (coverage name)
HYDRO	Hydrography (coverage name)
ID	Identifier
IND	Industry (coverage name)
ISO	International Organization for Standardization
ITD	Interim Terrain Data
LE	Linear error
MC&G	Mapping, Charting, and Geodesy
MCGT	Mapping, Charting, and Geodesy Technology
MSL	Mean Sea Level
NIMA	National Imagery and Mapping Agency (formerly Defense Mapping Agency - DMA)
OBS	Obstacles (coverage name)
PHY	Physiography (coverage name)
POP	Population (coverage name)
SDR	Surface Drainage (coverage name)

SLP	Slope/Surface Configuration (coverage name)
SMC	Soil/Surface Materials (coverage name)
STANAG	NATO Standardization Agreement
TLM	Topographic Line Map
TRANS	Transportation (coverage name)
TTADB	Tactical Terrain Analysis Data Base
UTIL	Utilities (coverage name)
USIGS	United States Imagery and Geospatial Information System
VEG	Vegetation (coverage name)
VITD	Vector Product Interim Terrain Data (VITD product name)
VMap	Vector Smart Map
VPF	Vector Product Format
WGS	World Geodetic System

6.4.8 Actual definitions. For actual definitions of VPF terms used in this specification refer to MIL-STD-2407, section 3. For actual definitions of features, attributes, and values used herein, refer to Edition 1.2, January 1994, DIGEST, Part 4, FACC. For illustrations and more definitive definitions of the topographic line map and terrain analysis features, attributes, and values refer to the TLM and TTADB specifications, MIL-T-89301 and MIL-T-89304, respectively.

6.5 Subject term (keyword) listing. This paragraph contains an alphabetical listing of subject terms (key words) that allow for identification of the document during retrieval searches. Note subject terms do not repeat words from title of this document, "Associated Performance Specification, Digital Topographic Data (DTOP)":

Beach (bch)
Built-up Area
Boundaries (bnd)
Data Quality (dq)
Digital Geographic Information Exchange Standard (DIGEST)
Feature and Attribute Coding Catalogue (FACC)
Geographic Information System (GIS)
Geographic Reference System (GEOREF)
Geospatial Information
Ground Obstacles (gob)
Hydrography (hydro)
Industry (ind)
Physiography (phys)
Population (pop)
Surface Drainage (sdr)
Slope/Surface Configuration (slp)
Soil/Surface Materials (smc)
Tactical Terrain Analysis Data Base (TTADB)
Terrain Analysis (TA)
Thematic Layers
Topographic Data

Transportation (trans)
Utilities (util)
Vector Product Format (VPF)
Vegetation (veg)

6.6 Standardization agreements. Certain provisions of this specification are the subject of international standardization agreements. When amendment, revision, or cancellation of this specification is proposed that will modify the international agreement concerned, the preparing activity will take appropriate action through international standardization channels, including departmental standardization offices, to change the agreement or make other appropriate accommodations.

6.6.1 NATO standardization agreements (STANAGs)

STANAG 2211, "Geodetic Datums, Spheroids, Grids, and Cell References".

6.7 Changes from previous issue. The margins of this specification are marked with vertical lines to indicate where changes from the previous issue, interim specification MIL-PRF-0089037(NIMA) were made. This was done as a convenience only and the Government assumes no liability whatsoever for any inaccuracies in these notations. Bidders and contractors are cautioned to evaluate the requirements of this document based on the entire content irrespective of the marginal notations and relationship to the last previous issue.

6.8 Classification and special handling of thematic files.

a. The classification of the final DTOP files will be determined by the appropriate security section responsible for the final classification. The lowest possible classification of the final product is desired.

b. Even though the final thematic files might be unclassified, a handling caveat could be required. Some NATO and other countries have mapping and other agreements which dictate the handling of materials produced over their country. Security elements should check for caveat requirements at the beginning of each project.

6.9 NIMA customer help desk. For questions concerning this or other NIMA products, services, or specifications, please telephone the NIMA Customer Help Desk at 1-800-455-0899, Commercial 314-260-1236, or DSN 490-1236.

DIGITAL TOPOGRAPHIC DATA (DTOP) DATA DICTIONARY ORGANIZATION

A.1 SCOPE

A.1.1 Scope. This appendix provides information on the data dictionary organization for the DTOP Product. It is a mandatory part of the specification. The information contained herein is intended for compliance.

A.2 APPLICABLE DOCUMENTS

This section is not applicable to this appendix.

A.3 DTOP DATA DICTIONARY ORGANIZATION

A.3.1 Data dictionary organization.

a. The data provided in this appendix are organized according to VPF structure levels. The DTOP product consists of four DTOP databases, which correspond to the quadrants of the world. The DTOP database tables appear first; they are described in Appendix B. The information provided in database tables applies to the entire database. Each DTOP database contains two types of libraries: the reference library described in Appendix C, and one or more data libraries (containing the product data) described in Appendix D. Appendix C contains the reference library VPF library level tables, the reference coverage (LIBREF), and the data coverages for the reference library. Appendix D contains the data library VPF library level tables, the reference coverages (TILEREF and LIBREF) for the data libraries. Appendix E contains the data coverages (spatial and attribute data) for the data libraries.

b. Appendix F contains a listing of the FACC feature codes with descriptions and the feature types they represent for DTOP libraries. Appendix F also contains a list of attribute codes with their associated features and feature types.

c. For this data dictionary, a brief description of each feature table is provided. All VPF tables consist of a header that is followed by the actual record contents. This appendix contains examples of the records that may be contained in actual tables. The data structure and contents for both the metadata tables and feature tables that may be present within a coverage are defined in this appendix. Tables not described in this appendix are described in the main sections of this product specification. Specifically, the format of metadata tables (such as documentation tables) is defined in section 3.14.4, the format and structure of index files are defined in section 3.12.3, and the format and structure of primitive tables are defined in section 3.14.6.

A.3.2 Notes regarding table format.

a. The header portion of each table (top half of each illustration) defines the entries required for the VPF table header; the content portion (bottom half) of each table defines the record entries for the data fields.

b. A semicolon (;) is a separator for the four components of a header.

c. The colon (:) indicates the end of a column definition.

d. Carriage returns are embedded in the text for readability only. All header information shall be a continuous string of characters with no carriage returns.

e. For more information on the format of a VPF table, see section 3.12.

f. For tables with a large number of columns and only one record entry (i.e., DHT, LHT, GRT), the backslash character (\) at the end of a line in the data records section indicates that the record entry is continued for each column for that record; no carriage returns are implied. This format permits the data records for a large number of columns to be represented so that they may fit on a page of this appendix.

DTOP DATABASE VPF TABLES AND CONTENTS

B.1 SCOPE

B.1.1 Scope. This appendix describes the structure and content of each VPF table in the DTOP database directory. It is a mandatory part of the specification. The information contained herein is intended for compliance.

B.2 APPLICABLE DOCUMENTS

This section is not applicable to this appendix.

B.3 DTOP DATABASE VPF TABLES AND CONTENTS

B.3.1 Database metadata tables.. The DTOP product will contain four DTOP databases. The extent of each database will correspond to a quadrant of the world. The DTOP database directory file name is the first file to appear on a CD-ROM followed by database metadata files as follows:

xxxxxxxx[1]	database directory file
lat	library attribute (extent) table
dht	database header table

[1] This corresponds to the appropriate database name, which is one of noamer, soamafr, sasaus, or eurnasia.

B.3.1.1 Library attribute (extent) table (LAT). The LAT contains the geographic extent (minimum bounding rectangle) of each library in the database (TABLE B-1).

TABLE B-1. Format and content for library attribute (extent) table.

{Header length}L; Library Attribute (Extent) Table;-; id=I,1,U,Row Identifier,-,-,-,: library_name=T,8,P,Library name,-,-,-,: xmin=F,1,N,Westernmost longitude,-,-,-,: ymin=F,1,N,Southernmost latitude,-,-,-,: xmax=F,1,N,Easternmost longitude,-,-,-,: ymax=F,1,N,Northernmost latitude,-,-,-,:;					
1	rference	-180.0	-40.0	0.0	90.0
2	t101us01[1]	-85.0	29.0	-80.0	31.0
3	t101us02[1]	-85.0	27.0	-80.0	29.0
4	t101us03[1]	-85.0	24.0	-80.0	27.0
:	:	:	:	:	:
n	n	n	n	n	n

[1] The names and extent of the libraries are only examples, actual names will be provided as part of the source package.

B.3.1.2 Library name. DTOP library names are an eight character code in which the first character is 't' indicating DTOP digital topographic data. The next three characters 'xxx' represent the VMap level 1 library name 1 to 240 (approximate number) libraries. The next two characters 'cc' represent

the country code in FIPS 10-3 in which the majority of the data resides, and the last two characters 'xx' represent the individual libraries within the above hierarchical scheme.

B.3.1.3 Database header table. The DHT describes the database (TABLE B-2).

TABLE B-2. Format and content for Database Header Table (DHT).

```
{Header length}L;
Database Header Table;-;
id=I,1,P,Row Identifier,-,-,-,:
vpf_version=T,10,N,VPF version number,-,-,-,:
database_name=T,8,N,Directory name of this database,-,-,-,:
database_desc=T,100,N,Description of this database,-,-,-,:
media_standard=T,20,N,Media Standard,-,-,-,:
originator=T,50,N,Producer of this database,-,-,-,:
addressee=T,100,N,Address of the producer,-,-,-,:
media_volumes=T,4,N,Number of Volumes in this database,-,-,-,:
seq_numbers=T,4,N,The Sequential Number(s) in this database,-,-,-,:
num_data_sets=T,4,N,Number of Libraries,-,-,-,:
security_class=T,1,N,Security Classification,-,-,-,:
downgrading=T,3,N,Downgrading,-,-,-,:
downgrade_date=D,1,N,Date of downgrading,-,-,-,:
releasability=T,20,N,Releasability restrictions of data,-,-,-,:
transmittal_id=T,1,N,Unique Transmittal Identifier,-,-,-,:
edition_number=T,10,N,Edition Number of this database,-,-,-,:
edition_date=D,1,N,Date of edition,-,-,-,:;
```

```
1\
9606\
dtopn\
Digital topographic database over North America continent supporting
tactical GIS applications.\
ISO 9660\
NATIONAL IMAGERY AND MAPPING AGENCY\
National Imagery and Mapping Agency, ATTN P, MS D-134, 4600 Sangamore
Road, Bethesda, MD 20816-5003\
1\
1\
varies\  (for prototype 2 libraries)
U\
NO\
00000000000000.\
RESTRICTED\
1\
1\
00000000000000.
```

REFERENCE LIBRARY

C.1 SCOPE

C.1.1 Scope. This appendix describes the structure and content of each VPF table in a reference library directory.. It is a mandatory part of the specification. The information contained herein is intended for compliance.

C.2 APPLICABLE DOCUMENTS

This section is not applicable to this appendix.

C.3 REFERENCE LIBRARY

a. Each database will contain an untiled reference library named, rference, which will be included on each DTOP CD. This library will contain smaller scale coverages which show a generalized extent of the database. Each coverage contains reference information designed to orient the user to the location and extent of the database and the libraries in it. The reference library will be 2-dimensional.

b. The structure and content of each VPF table in a reference library directory are provided in this section. Those records that vary are indicated by footnotes.

C.3.1 Reference library metadata tables. The RFERENCE library shall contain the following metadata tables at the library level.

rference	directory file
cat	coverage attribute (description) table
dqt	data quality table
dqx	data quality index file
grt	geographic reference table
lht	library header table
lineage.doc	an optional documentation table

C.3.1.1 Coverage attribute (description) table. The following CAT shall be present in the RFERENCE library. Table C-1 depicts the records that are present in the CAT.

TABLE C-1. Format and content for RFERENCE coverage attribute (description) table (CAT).

{Header length}L; Coverage Attribute (Description) Table;-; id=I,1,U,Row Identifier,-,-,-,: coverage_name=T,8,P,Coverage name,-,-,-,: description=T,50,N,Coverage description,-,-,-,: level=I,1,N,Topology level,-,-,-,:;			
1	libref	Library Reference	2
2	dbref	Database Reference	3
3	polbnd	Political Entities	3
4	placenam	Place Names	0

C.3.1.2 Library header table. The following LHT shall be present in the RFERENCE library. The format and content of the library header table for each library is presented in TABLE C-2.

TABLE C-2. Format and content for RFERENCE library header table (LHT).

```
{Header length}L;
Library Header Table;-;
id=I,1,P,Row Identifier,-,-,-,:
product_type=T,12,N,Product Type,-,-,-,:
library_name=T,12,N,Name,-,-,-,:
description=T,100,N,Description of the library,-,-,-,:
data_struct_code=T,1,N,Data Structure Code,-,-,-,:
scale=I,1,N,Scale of the library,-,-,-,:
source_series=T,15,N,Series,-,-,-,:
source_id=T,30,N,Identifier of the source reference,-,-,-,:
source_edition=T,20,N,Edition number of the source,-,-,-,:
source_name=T,100,N,Name of library source,-,-,-,:
source_date=D,1,N,Source Date,-,-,-,:
security_class=T,1,N,Security Classification,-,-,-,:
downgrading=T,3,N,Downgrading,-,-,-,:
downgrading_date=D,1,N,Date of downgrading,-,-,-,:
releasability=T,20,N,Releasability,-,-,-,:;
```

```
1\
DTOP\
rference\
Small-scale data to give users a geographic reference of DTOP database.\
8\
Various\
Various\
Various\
Various\
Various\
00000000000000.\
U\
NO\
00000000000000.\
RESTRICTED
```

Note: Each line represents the record value for each defined column.

C.3.1.3 Geographic reference table. The following GRT (Table C-3) shall be present in the RFERENCE library.

TABLE C-3. Format and content for a RFERENCE geographic reference table (GRT).

{Header length}L; Geographic Reference Table;-; id=I,1,P,Row Identifier,-,-,-,: data_type=T,3,N,Data Type,-,-,-,: units=T,3,N,Units,-,-,-,: ellipsoid_name=T,15,N,Ellipsoid,-,-,-,: ellipsoid_detail=T,50,N,Ellipsoid Details,-,-,-,: vert_datum_name=T,15,N,Datum Vertical Reference,-,-,-,: vert_datum_code=T,4,N,Vertical Datum Code,-,-,-,: sound_datum_name=T,15,N,Sounding Datum,-,-,-,: sound_datum_code=T,4,N,Sounding Datum Code,-,-,-,: geo_datum_name=T,15,N,Datum Geodetic Name,-,-,-,: geo_datum_code=T,4,N,Datum Geodetic Code,-,-,-,: projection_name=T,20,N,Projection Name,-,-,-,:;
1\ GEO\ M\ WGS 84\ A=6378137 B=6356752 Meters\ MEAN SEA LEVEL\ 015\ N/A\ N/A\ WGS 84\ WGE\ N/A\

C.3.1.4 Data quality table. The following data quality table shall be in the library directory for the RFERENCE library. The record content of this table may vary for each library. The format and sample content of the DQT for each library is presented in Table C-4.

TABLE C-4. Format and content for example Data Quality Table (DQT).

```
{Header length}L;
Library Data Quality Table;lineage.doc;
id=I,1,P,Row Identifier,-,-,-,:
vpf_level=T,8,N,VPF Level,-,-,-,:
vpf_level_name=T,8,N,Name of VPF Level,-,-,-,:
feature_complete=T,*,N,Feature Completeness Percent,-,-,-,:
attrib_complete=T,*,N,Attribute Completeness Percent,-,-,-,:
logical_consist=T,*,N,Logical Consistency,-,-,-,:
edition_num=T,8,N,Edition Number,-,-,-,:
creation_date=D,1,N,Creation Date,-,-,-,:
revision_date=D,1,N,Revision Date,-,-,-,:
spec_name=T,*,N,Product Specification Name,-,-,-,:
spec_date=D,1,N,Product Specification Date,-,-,-,:
earliest_source=D,1,N,Date of Earliest Source,-,-,-,:
latest_source=D,1,N,Date of Latest Source,-,-,-,:
collection_spec=T,*,N,Collection Specification Name,-,-,-,:
abs_horiz_acc=T,*,N,Absolute Horizontal Accuracy of VPF Level,-,-,-,:
abs_horiz_units=T,20,N,Unit of Measure for Absolute Horizontal Accuracy,-,-,-,:
abs_vert_acc=T,*,N,Absolute Vertical Accuracy of VPF Level,-,-,-,:
abs_vert_units=T,20,N,Unit of Measure for Absolute Vertical Accuracy,-,-,-,:
rel_horiz_acc=T,*,N,Point to Point Horizontal Accuracy of VPF Level,-,-,-,:
rel_horiz_units=T,20,N,Unit of Measure for Point to Point Horizontal Accuracy,-,-,-,:
rel_vert_acc=T,*,N,Point to Point Vertical Accuracy of VPF Level,-,-,-,:
rel_vert_units=T,20,N,Unit of Measure for Point to Point Vertical Accuracy,-,-,-,:
comments=T,*,N,Miscellaneous Comments,-,-,-,:;
```

```
1\
LIBRARY\
rference\
All features in this library are captured from the source materials and generalized as
necessary to depict referential information.\
All features in this library have valid attribute codes assigned to them in accordance
with this specification.\
All data are topologically correct.  No duplicate features are present within a
coverage.
All areas are completely described as extracted from the source materials.
No undershoots or overshoots are present.  All data were consistently captured using
the rules described in the documentation table associated with this table and in the
various feature table narrative files present at the coverage level within the
library.\
1\
00000000000000.\
00000000000000.\
DTOP MILSPEC MIL-PRF-89037A Product Specification\
20020801000000.\
00000000000000.\
00000000000000.\
DTOP Extraction Specification under development\
N/A\
N/A\
N/A\
N/A\
N/A\
N/A\
N/A\
N/A\
Additional descriptions of data lineage are available in the documentation table
associated with this data quality table (called lineage.doc).
```

C.3.1.5 Lineage narrative table. Information regarding the data contained in the library is captured in the lineage.doc file (Table C-5).

TABLE C-5. Format and sample content for lineage documentation table (lineage.doc).

{Header length}L; Lineage Documentation Table;-; id=I,1,P,Row Identifier,-,-,-,: text=T,80,N,Text information,-,-,-,:;	
1 2 3 4 5 : n	This table describes characteristics of the feature data within this library. Three subjects are discussed: 1) special "automation techniques, 2) source materials, and 3) database" design issues. The table does not contain a full description of the data production process. : ...

C.3.2 Reference library coverage and tables. Each RFERENCE library in a database shall be untiled, and will contain the following directory file and tables.

C.3.2.1 Library Reference coverage directory and files. The library reference coverage directory contains the following files:

libref	directory file
cnd	connected node table
csi	connected node spatial index file
ebr	edge bounding rectangle table
edg	edge primitive table
edx	edge variable length index file
esi	edge spatial index file
fcs	feature class schema table
libref.lft	library reference line feature table
libreft.tft	library reference text feature table
tsi	text spatial index file
txt	text primitive table
txx	text variable length index file

C.3.2.1.1 Library Reference feature class schema table. A feature class schema table shall be present in the library reference coverage. The format and content of the FCS are presented in Table C-6.

TABLE C-6. Content and format for libref feature class schema table (FCS).

Thematic Layer: Library Reference
Coverage Name: libref
Feature Table Description: Library Reference Feature Class Schema Table
Table Name: fcs

```
{Header length}L;
Library Reference Feature Class Schema Table;-;
id=I,1,P,Row Identifier,-,-,-,:
feature_class=T,8,N,Name of Feature Class,-,-,-,:
table1=T,12,N,First Table,-,-,-,:
table1_key=T,16,N,Column Name in First Table,-,-,-,:
table2=T,12,N,Second Table,-,-,-,:
table2_key=T,6,N,Column Name in Second Table,-,-,-,:;
```

1	libref	libref.lft	edg_id	edg	id
2	libref	edg	libref.lft_id	libref.lft	id
3	libreft	libreft.tft	txt_id	txt	id
4	libreft	txt	id	libreft.tft	txt_id

C.3.2.1.2 Library Reference feature tables. The feature tables implemented in the library reference coverage are specified in Tables C-7 to C-8 and C-11 to C-14. This table will contain a small scale representation of selected features to identify library extent within the appropriate database. The data content of these features will be generalized and derived from VMap Level 0 product.

TABLE C-7. Format and content for libref line feature table (libref.lft).

Thematic Layer: Library Reference
Coverage Name: libref
Feature Table Description: Library Reference Line Feature Table
Table Name: libref.lft

```
{Header length}L;
Library Reference Line Feature Table;-;
id=I,1,P,Row Identifier,-,-,-,:
f_code=T,5,N,FACC Feature Code,char.vdt,-,-,:
edg_id=I,1,N,Edge Primitive ID,-,-,-,:;
```

1	BA010	1
2	AP030	2
3	FA000	3
:	:	:
n	n	n

TABLE C-8. Format and content for libref text feature table (libreft.tft).

Thematic Layer: Library Reference
Coverage Name: libref
Feature Table Description: Library Reference Text Feature Table
Table Name: libreft.tft

{Header length}L; Library Reference Text Feature Table;-; id=I,1,P,Row Identifier,-,-,-,: f_code=T,5,N,FACC Feature Code,char.vdt,-,-,: txt_id=I,1,N,Text Primitive ID,-,-,-,:;		
1 2 3 : n	ZD040 ZD040 ZD045 : n	1 2 3 : n

C.3.2.1.3 Library Reference Primitive tables.

a. The primitive tables in the library reference coverage directory have the same format as the coverage primitive tables (see Tables 16 to 20). Although the text feature table is optional, a sample text primitive table is presented to show sample values for the STRING column (TABLE C-9). The text string depicting the library name will be appropriately placed near the top center of each library reference coverage in an appropriately sized font.

b. The structure and format of the variable-length index files and spatial index files are provided in section 3.12.3. The structure and format of the bounding rectangle tables are described in section 3.14.6.

TABLE C-9. Format and example of content for libref text primitive table (TXT).

Thematic Layer: Library Reference
Coverage Name: libref
Table Description: Text Primitive Table
Table Name: txt

{Header length}L; Text Primitive Table;-; id=I,1,P,Row Identifier,-,-,-,: string=T,*,N,Text String,-,-,-,: shape_line=C,*,N,Shape of Text String,-,-,-,:;		
1 : n	Text string[1] : n	-5.811609,43.662006 : n

[1] The names and extent of the DTOP libraries, or other geographic identifiers.

C.3.2.1.4 Library reference character value description table. A character value description table shall be present in the library coverage. A sample of format and content is shown in Table C-10.

TABLE C-10. Library reference character value description table.

Thematic Layer: Library Reference
Coverage Name: libref
Feature Table Description: Library Reference Character Value Description Table
Table Name: char.vdt

{Header length}L; Library Reference Character Value Description Table;-; id=I,1,P,Row Identifier,-,-,-,: table=T,12,N,Name of the Feature Table,-,-,-,: attribute=T,6,N,Column Name,-,-,-,: value=T,5,N,Unique Value of Attribute,-,-,-,: description=T,24,N,Description of Value,-,-,-,:;				
1	libref.lft	f_code	AP030	Road
2	libref.lft	f_code	BA010	Coastline/Shoreline
3	libref.lft	f_code	FA000	Administrative Boundary
4	libreft.tft	f_code	ZD040	Named Location
5	libreft.tft	f_code	ZD045	Text Description

C.3.3 Reference library coverage tables and file order.

a. Coverages for the RFERENCE library are shown in Table C-11. For each coverage, the feature class schema table is described first, followed by the feature tables. The type and content of documentation tables will vary with each coverage. For each feature table the attribute names, description, and attribute values are also represented. A summary of the RFERENCE coverages and feature classes is presented in Table C-12.

TABLE C-11. RFERENCE coverages.

Library Reference Coverage
Database Reference coverage
Political Entities Coverage
Place Names Coverage

TABLE C-12. RFERENCE library feature table(s) in coverages.

Coverage name	Feature classes			
	Point	Line	Area	Text
libref[1]		libref.lft		libreft.tft
dbref			dbref.aft	dbtxt.tft
polbnd			polbnd.aft	polbndtx.tft
placenam	placenam.pft			placetxt.tft

[1] Described in Section C.3.2.1.2.

b. The structure and content of each VPF table in the RFERENCE library directory are provided in this section. Those records that vary are indicated by footnotes.

c. The structure and format of the variable-length index files and spatial index files are provided in section 3.12.3. The structure and format of the bounding rectangle tables are described in section 3.14.6.

C.3.3.1 Database reference (DBREF) coverage. This coverage contains the outline of each DTOP data library on the CD-ROM as well as an outline of the corresponding VMap LV1 library. The files in this coverage are presented in Tables C-13 to C-16.

TABLE C-13. Content and format for DBREF coverage feature class schema table.

Thematic Layer: Database Reference
Coverage Name: dbref
Feature Table Description: Database Reference Feature Class Schema Table
Table Name: fcs

```
{Header length}L;
Database Reference Feature Class Schema Table;-;
id=I,1,P,Row Identifier,-,-,-,:
feature_class=T,8,N,Name of Feature Class,-,-,-,:
table1=T,12,N,First Table,-,-,-,:
table1_key=T,16,N,Column Name in First Table,-,-,-,:
table2=T,12,N,Second Table,-,-,-,:
table2_key=T,6,N,Column Name in Second Table,-,-,-,:;
```

1	dbref	dbref.aft	fac_id	fac	id
2	dbref	fac	dbref.aft_id	dbref.aft	id
3	dbtxt	dbtxt.tft	txt_id	txt	id
4	dbtxt	txt	id	dbtxt.tft	txt_id

TABLE C-14. DBREF area feature table.

Thematic Layer: Database Reference
Coverage Name: dbref
Feature Table Description: Database Reference Area Feature Table
Table Name: dbref.aft

```
{Header length}L;
Database Reference Area Feature Table;-;
id=I,1,P,Row Identifier,-,-,-,:
library_name=T,8,N,DTOP Library Name,-,-,-,:
fac_id=I,1,N,Face Primitive ID,-,-,-,:;
```

1	t101us10[1]	2
2	t045ca05[1]	3
3	westus[2]	4
:	:	:
n	n	n

[1] Library names in DTOP databases will vary.
[2] Library names of VMap LV1 library will vary.

TABLE C-15. DBREF text feature table.

Thematic Layer: Database Reference
Coverage Name: dbref
Feature Table Description: Database Reference Text Feature Table
Table Name: dbtxt.tft

{Header length}L; Database Reference Text Feature Table;-; id=I,1,P,Row Identifier,-,-,-,: f_code=T,5,N,FACC Feature Code,char.vdt,-,-,: txt_id=I,1,N,Text Primitive ID,-,-,-,:;		
1	ZD040	1
2	ZD045	2
:	:	:
n	n	n

TABLE C-16. Database reference character value description table.

Thematic Layer: Database Reference
Coverage Name: dbref
Feature Table Description: Database Reference Character Value Description Table
Table Name: char.vdt

{Header length}L; Database Reference Character Value Description Table;-; id=I,1,P,Row Identifier,-,-,-,: table=T,12,N,Name of the Feature Table,-,-,-,: attribute=T,6,N,Column Name,-,-,-,: value=T,5,N,Unique Value of Attribute,-,-,-,: description=T,*,N,Description of Value,-,-,-,:;				
1	dbtxt.tft	f_code	ZD040	Named Location
2	dbtxt.tft	f_code	ZD045	Text Description

C.3.3.2 Political entites (POLBND) coverage. This coverage contains the generalized small-scale outlines of the political entities and significant place names in the DTOP database. The boundaries may not be authoratative. The files for this coverage are presented in Tables C-17 to C-20.

TABLE C-17. Content and format for POLBND coverage feature class schema table.

Thematic Layer: Political Entities
Coverage Name: polbnd
Feature Table Description: Political Entities Feature Class Schema Table
Table Name: fcs

{Header length}L; Political Entities Feature Class Schema Table;-; id=I,1,P,Row Identifier,-,-,-,: feature_class=T,8,N,Name of Feature Class,-,-,-,: table1=T,12,N,First Table,-,-,-,: table1_key=T,16,N,Column Name in First Table,-,-,-,: table2=T,12,N,Second Table,-,-,-,: table2_key=T,6,N,Column Name in Second Table,-,-,-,:;					
1	polbnd	polbnd.aft	fac_id	fac	id
2	polbnd	fac	polbnd.aft_id	polbnd.aft	id
3	polbndtx	polbndtx.tft	txt_id	txt	id
4	polbndtx	txt	id	polbndtx.tft	txt_id

TABLE C-18. POLBND area feature table.

Thematic Layer: Political Entities
Coverage Name: polbnd
Feature Table Description: Political Entities Area Feature Table
Table Name: polbnd.aft

{Header length}L; Political Entities Area Feature Table;-; id=I,1,P,Row Identifier,-,-,-,: country_name=T,40,N,Political Entity Name,-,-,-,: fac_id=I,1,N,Face Primitive ID,-,-,-,:;		
1	United States of America	2
2	Canada	3
3	Mexico	4
4	:	5
:	:	:
n	n	n

TABLE C-19. POLBND text feature table.

Thematic Layer: Political Entities
Coverage Name: polbnd
Feature Table Description: Political Entities Text Feature Table
Table Name: polbndtx.tft

{Header length}L; Political Entities Text Feature Table;-; id=I,1,P,Row Identifier,-,-,-,: f_code=T,5,N,FACC Feature Code,char.vdt,-,-,: txt_id=I,1,N,Text Primitive ID,-,-,-,:;

1	ZD040	1
2	ZD045	2
:	:	:
n	n	n

TABLE C-20. Political entities character value description table.

Thematic Layer: Political Entities
Coverage Name: polbnd
Feature Table Description: Political Entities Character Value Description Table
Table Name: char.vdt

{Header length}L; Political Entities Character Value Description Table;-; id=I,1,P,Row Identifier,-,-,-,: table=T,12,N,Name of the Feature Table,-,-,-,: attribute=T,6,N,Column Name,-,-,-,: value=T,5,N,Unique Value of Attribute,-,-,-,: description=T,16,N,Description of Value,-,-,-,:;

1	polbndtx.tft	f_code	ZD040	Named Location
2	polbndtx.tft	f_code	ZD045	Text Description

C.3.3.3 Place name (PLACENAM) coverage. This coverage contains the generalized representation of the built-up areas in the DTOP database as named places. The files for this coverage are presented in Tables C-21 to C-23

TABLE C-21. Content and format for PLACENAM coverage feature class schema table.

Thematic Layer: Place Names
Coverage Name: placenam
Feature Table Description: Place Names Feature Class Schema Table
Table Name: fcs

```
{Header length}L;
Place Names Feature Class Schema Table;-;
id=I,1,P,Row Identifier,-,-,-,:
feature_class=T,8,N,Name of Feature Class,-,-,-,:
table1=T,12,N,First Table,-,-,-,:
table1_key=T,16,N,Column Name in First Table,-,-,-,:
table2=T,12,N,Second Table,-,-,-,:
table2_key=T,6,N,Column Name in Second Table,-,-,-,:;
```

1	placenam	placenam.pft	end_id	end	id
2	placenam	end	placenam.pft_id	placenam.pft	id
3	placetxt	placetxt.tft	txt_id	txt	id
4	placetxt	txt	id	placetxt.tft	txt_id

TABLE C-22. PLACENAM point feature table.

Thematic Layer: Place Names
Coverage Name: placenam
Feature Table Description: Place Names Point Feature Table
Table Name: placenam.pft

```
{Header length}L;
Place Names Point Feature Table;-;
id=I,1,P,Row Identifier,-,-,-,:
place_name=T,40,N,Place Name,-,-,-,:
end_id=I,1,N,Entity Node Primitive ID,-,-,-,:;
```

1	Baltimore	1
2	Fairfax	2
3	St. Louis	3
4	Reston	4
:	:	:
n	n	n

TABLE C-23. PLACENAM Text Feature Table.

Thematic Layer: Place Names
Coverage Name: placenam
Feature Table Description: Place Names Text Feature Table
Table Name: placetxt.tft

{Header length}L; Place Names Text Feature Table;-; id=I,1,P,Row Identifier,-,-,-,: name=T,20,N,Place Name,-,-,-,: txt_id=I,1,N,Text Primitive ID,-,-,-,:;		
1	Richmond	1
2	Fairfax	2
3	Baltimore	3
:	:	:
n	n	n

DATA LIBRARY

D.1 SCOPE

D.1.1 Scope. This appendix describes the structure and content of each DTOP metadata and reference coverage table in a data library of the database. It is a mandatory part of the specification. The information contained herein is intended for compliance.

D.2 APPLICABLE DOCUMENTS

This section is not applicable to this appendix.

D.3 DATA LIBRARY

a. The structure and content of each VPF table in a data library of the DTOP database are provided in this section. The actual record contents of the metadata tables will vary with each library.

b. Each DTOP library is represented as a directory file.

D.3.1 Library metadata tables. Each data library shall contain the following metadata tables at the library level.

t101us04[1]	directory file
cat	coverage attribute (description) table
dqt	data quality table
dqx	data quality index file
grt	geographic reference table
lht	library header table
lineage.doc	an optional documentation table

[1] Representative directory name for a DTOP library.

D.3.1.1 Coverage attribute (description) table. The following CAT shall be present in every data library. Table D-1 depicts all of the possible records that may be present in the CAT.

TABLE D-1. Format and sample content for coverage attribute (description) table (CAT).

{Header length}L;			
Coverage Attribute (Description) Table;-;			
id=I,1,U,Row Identifier,-,-,-,:			
coverage_name[1]=T,8,P,Coverage name,-,-,-,:			
description=T,27,N,Coverage description,-,-,-,:			
level[2]=I,1,N,Topology level,-,-,-,:;			
1	libref	Library Reference	2
2	tileref	Tile Reference	3
3	bch	Beach	3
4	bnd	Boundaries	3
5	dq	Data Quality	3
6	hydro	Hydrography	3
7	ind	Industry	3
8	obs	Obstacles	3
9	phys	Physiography	3
10	pop	Population	3
11	sdr	Surface Drainage	3
12	slp	Slope/Surface Configuration	3
13	smc	Soil/Surface Materials	3
14	trans	Transportation	3
15	util	Utilities	3
16	veg	Vegetation	3

[1] This table depicts all possible coverages which may be present in a library, presence of these coverages will vary with data availability. If library does not contain any data for a particular coverage, then the record describing the coverage will not be present.

[2] The number 3 in the LEVEL column represents the highest topology for each coverage. If the universal face is the only face present, no spatial index will occur.

D.3.1.2 Library header table. The following LHT shall be present in every library. The format and sample content of the library header table for each library is presented in Table D-2. The record content of this table will vary for each library.

TABLE D-2. Format and content for example library header table (LHT).

{Header length}L; Library Header Table;-; id=I,1,P,Row Identifier,-,-,-,: product_type=T,12,N,Product Type,-,-,-,: library_name=T,12,N,Name,-,-,-,: description=T,100,N,Description of the library,-,-,-,: data_struct_code=T,1,N,Data Structure Code,-,-,-,: scale=I,1,N,Scale of the library,-,-,-,: source_series=T,15,N,Series,-,-,-,: source_id=T,30,N,Identifier of the source reference,-,-,-,: source_edition=T,20,N,Edition number of the source,-,-,-,: source_name=T,100,N,Name of library source,-,-,-,: source_date=D,1,N,Source Date,-,-,-,: security_class=T,1,N,Security Classification,-,-,-,: downgrading=T,3,N,Downgrading,-,-,-,: downgrading_date=D,1,N,Date of downgrading,-,-,-,: releasability=T,20,N,Releasability,-,-,-,:;
1\ DTOP\ t101us08[1]\ Digital topographic data collected over southeastern U.S. from multiple sources.\ 8\ 50000\ tbd\ tbd\ tbd\ Multiple sources used\ 19760000000000.\ U\ NO\ 00000000000000.\ RESTRICTED\

[1] Replace with appropriate record content for each library.

Note: Each line represents the record value for each defined column.

D.3.1.3 Geographic reference table. The following GRT shall be present in every library. The record content of this table may vary for each library. The format and sample content of the geographic reference table for each library is presented in Table D-3.

TABLE D-3. Format and sample content for an geographic reference table (GRT).

```
{Header length}L;
Geographic Reference Table;-;
id=I,1,P,Row Identifier,-,-,-,:
data_type=T,3,N,Data Type,-,-,-,:
units=T,3,N,Units of Measure Code for Library,-,-,-,:
ellipsoid_name=T,15,N,Ellipsoid,-,-,-,:
ellipsoid_detail=T,50,N,Ellipsoid Details,-,-,-,:
vert_datum_name=T,15,N,Datum Vertical Reference,-,-,-,:
vert_datum_code=T,4,N,Vertical Datum Code,-,-,-,:
sound_datum_name=T,15,N,Sounding Datum,-,-,-,:
sound_datum_code=T,4,N,Sounding Datum Code,-,-,-,:
geo_datum_name=T,15,N,Datum Geodetic Name,-,-,-,:
geo_datum_code=T,4,N,Datum Geodetic Code,-,-,-,:
projection_name=T,20,N,Projection Name,-,-,-,:;
```

```
1\
GEO\
M\
WGS 84\
A=6378137 B=6356752 Meters\
Mean Sea Level\
015\
N/A\
N/A\
WGS 84\
WGE\
N/A\
```

D.3.1.4 Data quality table. The following data quality table shall be present at the library-level for every library. The record content of this table may vary for each library. The format and sample content of the DQT for each library is presented in Table D-4.

TABLE D-4. Format and content for example data quality table (DQT).

```
{Header length}L;
Library Data Quality Table;lineage.doc;
id=I,1,P,Row Identifier,-,-,-,:
vpf_level=T,8,N,VPF Level,-,-,-,:
vpf_level_name[1]=T,8,N,Name of VPF Level,-,-,-,:
feature_complete=T,*,N,Feature Completeness Percent,-,-,-,:
attrib_complete=T,*,N,Attribute Completeness Percent,-,-,-,:
logical_consist=T,*,N,Logical Consistency,-,-,-,:
edition_num=T,8,N,Edition Number,-,-,-,:
creation_date=D,1,N,Creation Date,-,-,-,:
revision_date=D,1,N,Revision Date,-,-,-,:
spec_name=T,*,N,Product Specification Name,-,-,-,:
spec_date=D,1,N,Product Specification Date,-,-,-,:
earliest_source=D,1,N,Date of Earliest Source,-,-,-,:
latest_source=D,1,N,Date of Latest Source,-,-,-,:
collection_spec=T,*,N,Collection Specification Name,-,-,-,:
abs_horiz_acc=T,*,N,Absolute Horizontal Accuracy of VPF Level,-,-,-,:
abs_horiz_units=T,20,N,Unit of Measure for Absolute Horizontal Accuracy,-,-,-,:
abs_vert_acc=T,*,N,Absolute Vertical Accuracy of VPF Level,-,-,-,:
abs_vert_units=T,20,N,Unit of Measure for Absolute Vertical Accuracy,-,-,-,:
rel_horiz_acc=T,*,N,Point to Point Horizontal Accuracy of VPF Level,-,-,-,:
rel_horiz_units=t,20,n,unit of Measure for Point to Point Horizontal Accuracy,-
,-,-,:
rel_vert_acc=T,*,N,Point to Point Vertical Accuracy of VPF Level,-,-,-,:
rel_vert_units=T,20,N,Unit of Measure for Point to Point Vertical Accuracy,-,-
,-,:
comments=T,*,N,Miscellaneous Comments,-,-,-,:;
```

```
1\
LIBRARY\
t101us08\
All features in this library are captured from the source materials using the
rules for feature extraction and inclusion conditions in accordance with this
specification,.\
All features in this library have valid attribute codes assigned to them in
accordance with this specification.\
All data are topologically correct.  No duplicate features are present within a
coverage.
All areas are completely described as extracted from the source materials.
No undershoots or overshoots are present.  All data were consistently captured
using the rules described in the documentation table associated with this table
and in the various feature table narrative files present at the coverage level
within the library.\
2\
00000000000000.\
00000000000000.\
```

TABLE D-4. Format and content for example data quality table (DQT) Continued.

DTOP MILSPEC MIL-PRF-89037A\
20020801000000.\
00000000000000.\
00000000000000.\
DTOP Extraction spec is under development\
+/- (125)[2] meters: This figure represents the overall absolute horizontal accuracy in this library in accordance with this specification.\[example only]
Meters\
+/- (100)[2] meters: This figure represents the overall vertical accuracy in this library in accordance with this specification.\[example only]
Meters\
Unknown\
N/A\
Unknown\
N/A\
Additional descriptions of data lineage are available in the documentation table associated with this data quality table (called lineage.doc).\

[1] Replace with appropriate DTOP library name for each appropriate library.

[2] These values are for example only. Refer to section 3.1 for clarification.

D.3.1.5 Lineage narrative table. Information regarding the data contained in the library is captured in the lineage.doc file (Table D-5). This table is an optional table. Information regarding sources that were used in the compilation of product within the library is contained within this table. Information about the sources can only be associated at the level of the security classification of the final product. Only those sources that are pertained to currency or ground truth to assist the users evaluation of the data should be included. An example of the format and content is presented in the table below.

TABLE D-5. Format and sample content for lineage documentation table (lineage.doc).

{Header length}L;	
Lineage Documentation Table;-;	
id=I,1,P,Row Identifier,-,-,-,:	
text=T,80,N,Text information,-,-,-,:;	
1	For this library, photography was flown during Nov. 1990 and
2	Jan. 1991. Since snow covered the ground at higher elevations,
3	road and bridge maps series M754 were used to delineate roads
4	and bridges. All military load classes were used from the maps.
5	For the utility coverage, a Korean powerline map dated 1988,
:	was used as the primary source for substation and powerplants.
n	... etc.

D.3.2 Data library reference coverages and tables. The following coverages, including directory files and tables, apply to all tiled data libraries. Tile reference and library reference coverages will be untiled within their associated library.

D.3.2.1 Tile reference coverage directory and files. The tile reference coverage directory contains the following files:

tileref	directory file
cnd	connected node primitive table
csi	connected node spatial index file
ebr	edge bounding rectangle table
edg	edge primitive table
edx	edge variable length index file
esi	edge spatial index file
fac	face primitive table
fbr	face bounding rectangle
fcs	feature class schema table
fsi	face spatial index file
rng	ring table
tileref.aft	tile reference area feature table
tilereft.tft	tile reference text feature table (optional)
tsi	text spatial index file
txt	text primitive table
txx	text variable length index file

D.3.2.1.1 Tile Reference feature class schema table. A feature class schema table shall be present in every tile reference coverage (TILEREF). The format and content of the FCS is presented in Table D-6. The record content of this table may vary for each tile reference coverage depending upon the presence or absence of a text feature class.

TABLE D-6. Content and format for TILEREF feature class schema table.

Thematic Layer: Tile Reference
Coverage Name: tileref
Table Description: Feature Class Schema Table
Table Name: fcs

```
{Header length}L;
Tile Reference Feature Class Schema Table;-;
id=I,1,P,Row Identifier,-,-,-,:
feature_class=T,8,N,Name of Feature Class,-,-,-,:
table1=T,12,N,First Table,-,-,-,:
table1_key=T,16,N,Column Name in First Table,-,-,-,:
table2=T,12,N,Second Table,-,-,-,:
table2_key=T,6,N,Column Name in Second Table,-,-,-,:;
```

1	tileref	tileref.aft	fac_id	fac	id
2	tileref	fac	tileref.aft_id	tileref.aft	id
3	tilereft	tilereft.tft	txt_id	txt	id
4	tilereft	txt	id	tilereft.tft	txt_id

D.3.2.1.2 Tile reference feature tables. The feature tables implemented in the tile reference coverage are specified in Tables D-7 to D-9. The text feature table is optional. If it is present, there is a one-to-one correspondence between the records of the tile reference area feature table and text feature table.

TABLE D-7. Format and sample content for DTOP TILEREF area feature table.

Thematic Layer: Tile Reference
Coverage Name: tileref
Table Description: Tile Reference Area Feature Table
Table Name: tileref.aft

{Header length}L; Tile Reference Area Feature Table;-; id=I,1,P,Row Identifier,-,-,-,: tile_name=T,14,N,DTOP Library Tile Path Name,-,-,-,: fac_id=I,1,N,Face Primitive ID,-,fac1_id.ati,-,:;

1	\fj\h\b\t1500[1]	2
2	\fj\h\b\t1515[1]	3
3	\fj\h\b\t3030[1]	4
4	\fj\h\b\t3015[1]	5
:	:	:
n	n	n

[1] The sample tile path names for libraries.

TABLE D-8. Format and content for TILEREF text feature table.

Thematic Layer: Tile Reference
Coverage Name: tileref
Table Description: Tile Reference Text Feature Table
Table Name: tilereft.tft

{Header length}L; Tile Reference Text Feature Table;-; id=I,1,P,Row Identifier,-,-,-,: tile_name=T,9,N,Tile Name,-,-,-,: txt_id=I,1,N,Text Primitive ID,-,txt1_id.tti,-,:;

1	fjhbt1500	1
2	fjhat3030	2
3	:	3
:	:	:
n	n	n

D.3.2.1.3 Tile reference primitive tables.

a. The primitive tables in the tile reference coverage directory have the same format as the coverage primitive tables (reference Tables 16 to 20). Although the text feature table is optional, a sample text primitive table is presented to show sample values for the string column (Table D-9).

b. The structure and format of the variable-length index files and spatial index files are provided in section 3.12.3. The structure and format of the bounding rectangle tables are described in section 3.14.6.

TABLE D-9. Format and example of content for TILEREF text primitive table.

Thematic Layer: Tile Reference
Coverage Name: tileref
Table Description: Text Primitive Table
Table Name: txt

{Header length}L;		
Text Primitive Table;-;		
id=I,1,P,Row Identifier,-,-,-,:		
string=T,*,N,Text String,-,-,-,:		
shape_line=C,*,N,Shape of Text String,-,-,-,:;		
1	\fj\h\b\t1500[1]	-5.811609,43.662006
2	\fj\h\b\t1515[1]	-8.574136,43.435287
3	\fj\h\b\t3030[1]	-7.437326,42.881957
4	\fj\h\b\t3015[1]	-6.835582,40.736553
:	:	:
n	n	n

[1] Sample tile path names for libraries.

D.3.2.2 Library reference coverage directory and files. The library reference coverage directory contains the following files:

libref	directory file
cnd	connected node primitive table
csi	connected node spatial index file
ebr	edge bounding rectangle table
edg	edge primitive table
edx	edge variable length index file
esi	edge spatial index file
fcs	feature class schema table
libref.lft	library reference line feature table
libreft.tft	library reference text feature table
tsi	text spatial index file
txt	text primitive table
txx	text variable length index file

D.3.2.2.1 Library reference feature class schema table. A feature class schema table shall be present in every library reference coverage (libref). The format and content of the FCS is presented in Table D-10. The record content of this table may vary for each library reference coverage, depending upon the presence or absence of a text feature class.

TABLE D-10. Content and format for libref feature class schema table.

Thematic Layer: Library Reference
Coverage Name: libref
Table Description: Library Reference Feature Class Schema Table
Table Name: fcs

```
{Header length}L;
Library Reference Feature Class Schema Table;-;
id=I,1,P,Row Identifier,-,-,-,:
feature_class=T,8,N,Name of Feature Class,-,-,-,:
table1=T,12,N,First Table,-,-,-,:
table1_key=T,16,N,Column Name in First Table,-,-,-,:
table2=T,12,N,Second Table,-,-,-,:
table2_key=T,6,N,Column Name in Second Table,-,-,-,:;
```

1	libref	libref.lft	edg_id	edg	id
2	libref	edg	libref.lft_id	libref.lft	id
3	libreft	libreft.tft	txt_id	txt	id
4	libreft	txt	id	libreft.tft	txt_id

D.3.2.2.2 Library reference feature tables. The feature tables implemented in the library reference coverage are specified in Tables D-11 to D-12 and associated tables as shown in Tables D-13 and D-14.

TABLE D-11. Format and content for libref line feature table. (This feature table will contain selected linear features to identify the extent of the data library. The type of data include administrative boundaries, coastlines, and roads. The source feature classes include POLBNDL, COASTL, and ROADL.)

Thematic Layer: Library Reference
Coverage Name: libref
Table Description: Library Reference Line Feature Table
Table Name: libref.lft

```
{Header length}L;
Library Reference Line Feature Table;-;
id=I,1,P,Row Identifier,-,-,-,:
f_code=T,5,N,FACC Feature Code,char.vdt,f_code1.lti,-,:
edg_id=I,1,N,Edge Primitive ID,-,edg1_id.lti,-,:;
```

1	FA000	1
2	BA010	2
3	AP030	3
:	:	:
n	n	n

TABLE D-12. Format and content for libref text feature table. (This feature table will contain selected features to identify the extent of the data library. The data content of these features will be the names of built-up areas and will be generated from the area Built-Up Area relational attribute table.)

Thematic Layer: Library Reference
Coverage Name: libref
Table Description: Library Reference Text Feature Table
Table Name: libreft.tft

{Header length}L; Library Reference Text Feature Table;-; id=I,1,P,Row Identifier,-,-,-,: f_code=T,5,N,FACC Feature Code,char.vdt,f_code1.tti,-,: txt_id=I,1,N,Text Primitive ID,-,txt1_id.tti,-,:;		
1	ZD040	1
2	ZD040	2
3	ZD045	3
:	:	:
n	n	n

D.3.2.2.3 Library reference primitive tables. The edge and text primitive tables in the library reference coverage directory have the same format as the coverage primitive files.

TABLE D-13. Format and example of the content for libref text primitive table.

Thematic Layer: Library Reference
Coverage Name: libref
Table Description: Text Primitive Table
Table Name: txt

{Header length}L; Text Primitive Table;-; id=I,1,P,Row Identifier,-,-,-,: string=T,*,N,Text String,-,-,-,: shape_line=C,*,N,Shape of Text String,-,-,-,:;		
1	Text string[1]	-5.811609,43.662006
:	:	:
n	n	n

[1] The name of city or other geographic identifiers.

TABLE D-14. Library reference character value description table.

Thematic Layer: Library Reference
Coverage Name: libref
Feature Table Description: Library Reference Character Value Description Table
Table Name: char.vdt

{Header length}L;				
Library Reference Character Value Description Table;-;				
id=I,1,P,Row Identifier,-,-,-,:				
table=T,12,N,Name of the Feature Table,-,-,-,:				
attribute=T,6,N,Column Name,-,-,-,:				
value=T,5,N,Unique Value of Attribute,-,-,-,:				
description=T,*,N,Description of Value,-,-,-,:;				
1	libref.lft	f_code	AP030	Road
2	libref.lft	f_code	BA010	Coastline/Shoreline
3	libref.lft	f_code	FA000	Administrative Boundary
4	libreft.tft	f_code	ZD040	Named Location
5	libreft.tft	f_code	ZD045	Text Description

DTOP THEMATIC COVERAGE DIRECTORY RECORD LAYOUT

E.1 SCOPE

E.1.1 Scope. This appendix contains the thematic coverage directory record layout for DTOP data. It is a mandatory part of the specification. The information contained herein is intended for compliance.

E.2 APPLICABLE DOCUMENTS

This section is not applicable to this appendix.

E.3 DTOP THEMATIC COVERAGE DIRECTORY RECORD LAYOUT.

E.3.1. Coverage tables and files order.

a. For each coverage (Table E-1), the feature class schema table is described first, followed by the feature tables, then value description tables. The type and content of documentation tables will vary with each coverage. For each feature table the attribute names, descriptions, and values are given. A summary of the thematic layers, coverages, and feature classes is presented in TABLE E-2.

b. The portrayal criteria gives generalized information of how the particular feature, based on FACC code, may be represented in this specification. For example, a bridge AQ040 will be collected either as a point or a line based on its length. However, a bridge will not be portrayed if the associated road is not portrayed in a built-up area.

c. Thematic index files identified in the header of a feature table are defined in section 3.12.3. The structure and format of the variable-length index files and spatial index files are described in section 3.12.3. The structure and format of the bounding rectangle tables are described in section 3.14.6.

TABLE E-1. DTOP data coverages.

Beach coverage
Boundaries coverage
Data Quality coverage
Hydrography coverage
Industry coverage
Obstacles coverage
Physiography coverage
Population coverage
Surface Drainage coverage
Slope/Surface Configuration coverage
Soil/Surface Materials coverage
Transportation coverage
Utilities coverage
Vegetation coverage

TABLE E-2. DTOP feature table(s) in tiled coverages.

Coverage Name	Feature Tables				
	Point	**Node**	**Line**	**Area**	**Text**
bch				beacha.aft	
bnd	elevp.pft markersp.pft oasisp.pft	markersc.pft	coastl.lft polbndl.lft	bndvoida.aft oasisa.aft polbnda.aft	bndtxt.tft
dq			dqline.lft	dqarea.aft dqvoida.aft	dqtxt.tft
hydro	dangerp.pft wellp.pft		reefl.lft seastrtl.lft	coasta.aft dangera.aft hydvoida.aft seastrta.aft	hydrotxt.tft
ind	agstorep.pft cisternp.pft extractp.pft obstrp.pft processp.pft rigwellp.pft storagep.pft towerp.pft		indl.lft	agstorea.aft disposea.aft extracta.aft indvoida.aft nucleara.aft processa.aft storagea.aft stockyda.aft	indtxt.tft
obs			misobsl.lft obsline.lft obsmanl.lft obsmandl.lft	misobsa.aft obsvoida.aft teetha.aft	
phys	cavep.pft lndfrmp.pft thermalp.pft		lndfrml.lft	asphalta.aft landicea.aft lndfrm1a.aft lndfrm2a.aft phyvoida.aft seaicea.aft	phystxt.tft
pop	buildp.pft fortp.pft landmrkp.pft mispopp.pft ruinsp.pft		buildl.lft landmrkl.lft	builda.aft builtupa.aft forta.aft landmrka.aft mobilea.aft plazaa.aft popvoida.aft ruinsa.aft sporta.aft	poptxt.tft
slp				pchanela.aft pwatera.aft slpolya.aft slpvoida.aft	

TABLE E-2. DTOP feature table(s) in tiled coverages (Continued).

	Feature Tables				
Coverage Name	**Point**	**Node**	**Line**	**Area**	**Text**
sdr	damlockp.pft intakep.pft springp.pft	damlockc.pft rapidsc.pft sdrnode.pft springc.pft	chanell.lft daml.lft fordl.lft misdrl.lft penstkl.lft rapidsl.lft	chanela.aft damlocka.aft lakeresa.aft misdra.aft sdrvoida.aft watera.aft	sdrtxt.tft
smc				sbuiltua.aft schanela.aft soila.aft smvoida.aft swatera.aft	
trans	aerofacp.pft harborp.pft misaerop.pft	bridgec.pft contric.pft ferryc.pft fordc.pft mtnpssc.pft rrturnc.pft steepc.pft tunnelc.pft	bridgel.lft ferryl.lft fordl.lft harborl.lft liftl.lft railrdl.lft roadl.lft trackl.lft traill.lft tunnell.lft	aerofaca.aft harbora.aft resta.aft rryarda.aft runwaya.aft storveha.aft travoida.aft	transtxt.tft
util	commp.pft pumpingp.pft solarp.pft substatp.pft	commc.pft cxpipec.pft utilnode.pft	pipel.lft powerl.lft telel.lft	comma.aft utilarea.aft utivoida.aft	utiltxt.tft
veg				barrena.aft cropa.aft grassa.aft treesa.aft vegvoida.aft vbuiltua.aft vwatera.aft vchanela.aft	

E.3.2 Beach Coverage. This coverage contains only area features relating to the delineation of the beach area that can be used as a template to extract information from other coverages and/or databases, that contained with the beach. This coverage does not imply where amphibious landing can be performed, only that an area of beach exists. This is an optional coverage will appear only in those libraries where coastlines/offshore water exists or as determined by area requirements.

TABLE E-3. Content and Format for Beach Coverage Feature Class Schema Table.

Thematic Layer:	Beach
Coverage Name:	bch
Feature Table Description:	Beach Feature Class Schema Table
Table Name:	fcs
DQ Layer Number:	1

```
{Header length}L;
Beach Feature Class Schema Table;-;
id=I,1,P,Row Identifier,-,-,-,:
feature_class=T,8,N,Name of Feature Class,-,-,-,:
table1=T,12,N,First Table in a Relationship,-,-,-,:
table1_key=T,16,N,Column Name in First Table,-,-,-,:
table2=T,12,N,Second Table in a Relationship,-,-,-,:
table2_key=T,16,N,Column Name in Second Table,-,-,-,:;
```

1	beacha	beacha.aft	id	beacha.ajt	beacha.aft_id
2	beacha	beacha.ajt	fac_id	fac	id
3	beacha	fac	id	beacha.ajt	fac_id
4	beacha	beacha.ajt	beacha.aft_id	beacha.aft	id

TABLE E-4. Beach Area Join Table.

(This table is used to combine area beach features with their associated face primitives in a one-to-many relationship.)

```
{Header length}L;
Beach Area Join Table;-;
id=I,1,P,Row Identifier,-,-,-,:
beacha.aft_id=I,1,N,Feature Key,-,beacha.jti,-,:
tile_id=S,1,N,Tile Reference ID,-,tile1_id.jti,-,:
fac_id=I,1,N,Face Primitive ID,-,fac1_id.jti,-,:;
```

TABLE E-5. Beach Area Feature Table.

Thematic Layer: Beach
Coverage Name: bch
Feature Table Description: Beach Area Feature Table
Table Name: beacha.aft
DQ Layer Number: 1
Portrayal Criteria: For BA060 must be greater than 50,000 square meters.

```
{Header length}L;
Beach Area Feature Table;-;
id=I,1,P,Row Identifier,-,-,-,:
f_code=T,5,N,FACC Feature Code,char.vdt,-,-,:
bit=S,1,N,Beach Indicator Type,int.vdt,-,-,:
vdc=S,1,N,Vertical Datum Category,int.vdt,-,-,:;
```

Column	Description	Value	Value Meaning	Applicable f_code for Each Attribute Value
id	Row Identifier	Sequential beginning with 1		
f_code	FACC Feature Code			
		BA060	Beach Zone	
bit	Beach Indicator Type			
		0	Unknown	BA060
		1	Nearshore	BA060
		2	Foreshore	BA060
		3	Backshore	BA060
vdc	Vertical Datum Category			
		0	Unknown	BA060
		7	Mean High Water	BA060
		9	Mean High Water Springs	BA060
		10	Mean Higher High Water	BA060
		15	Mean Sea Level	BA060
		24	Mean Higher High Water Springs	BA060
		26	Highest Normal High Water	BA060

TABLE E-5. Beach Area Feature Table (Continued).

28	Highest High Water	BA060
30	Indian Spring High Water	BA060
999	Other	BA060

TABLE E-6. Beach Feature Class Attribute Table.

Thematic Layer: Beach
Coverage Name: bch
Table Description: Beach Feature Class Attribute Table
Table Name: fca
DQ Layer Number: 1

```
{Header length}L;
Beach Feature Class Attribute Table;-;
id=I,1,P,Row Identifier,-,-,-,:
fclass=T,8,U,Feature Class Name,-,-,-,:
type=T,1,N,Feature Type,char.vdt,-,-,:
descr=T,*,N,Description,-,-,-,:;
```

Column	Description	Value	Value Meaning	Applicable Feature Class for Each Attribute Value
id	Row Identifier	Sequential beginning with 1		
fclass	Feature Class Name	beacha		
type	Feature Type	A	Area Feature	beacha
descr	Description	Beach Area		beacha

TABLE E-7. Beach Character Value Description Table.

Thematic Layer: Beach
Coverage Name: bch
Feature Table Description: Beach Character Value Description Table
Table Name: char.vdt
DQ Layer Number: 1

```
{Header length}L;
Beach Character Value Description Table;-;
id=I,1,P,Row Identifier,-,-,-,:
table=T,12,N,Name of the Feature Class Table,-,-,-,:
attribute=T,6,N,Column Name,-,-,-,:
value=T,5,N,Unique Value of Attribute,-,-,-,:
description=T,*,N,Attribute Value Description,-,-,-,:;
```

1	beacha.aft	f_code	BA060	Beach Zone
2	fca	type	A	Area Feature

E.3.2.1 Beach coverage glossary.

BA060 Beach Zone (A) An area defined from the shoreline inland to a predetermined distance or to the first existence of a mode of transportation and from the shoreline seaward to a predetermined depth. (For this product a water depth of 10 meters and the location of the first transportation network determines the limits of the feature.)
BIT Beach Indicator Type (A) The area defined by zones of high and low water, where the coastal area is exposed at different times and heights.
VDC Vertical Datum Category (A) The reference line (0 elevation) from which heights and depths are measured.

TABLE E-8. Beach Integer Value Description Table.

Thematic Layer: Beach
Coverage Name: bch
Feature Table Description: Beach Integer Value Description Table
Table Name: int.vdt
DQ Layer Number: 1

{Header length}L;
Beach Integer Value Description Table;-;
id=I,1,P,Row Identifier,-,-,-,:
table=T,12,N,Name of the Feature Class Table,-,-,-,:
attribute=T,3,N,Column Name,-,-,-,:
value=S,1,N,Unique Value of Attribute,-,-,-,:
description=T,*,N,Attribute Value Description,-,-,-,:;

1	beacha.aft	bit	0	Unknown
2	beacha.aft	bit	1	Nearshore
3	beacha.aft	bit	2	Foreshore
4	beacha.aft	bit	3	Backshore
5	beacha.aft	vdc	0	Unknown
6	beacha.aft	vdc	7	Mean High Water
7	beacha.aft	vdc	9	Mean High Water Springs
8	beacha.aft	vdc	10	Mean Higher High Water
9	beacha.aft	vdc	15	Mean Sea Level
10	beacha.aft	vdc	24	Mean Higher High Water Springs
11	beacha.aft	vdc	26	Highest Normal High Water
12	beacha.aft	vdc	28	Highest High Water
13	beacha.aft	vdc	30	Indian Spring High Water
14	beacha.aft	vdc	999	Other

E.3.3 Boundaries coverage.

TABLE E-9. Content and Format for Boundaries Coverage Feature Class Schema Table.

Thematic Layer: Boundaries
Coverage Name: bnd
Feature Table Description: Boundaries Feature Class Schema Table
Table Name: fcs
DQ Layer Number: 2

{Header length}L;
Boundaries Feature Class Schema Table;-;
id=I,1,P,Row Identifier,-,-,-,:
feature_class=T,8,N,Name of Feature Class,-,-,-,:
table1=T,12,N,First Table in a Relationship,-,-,-,:
table1_key=T,16,N,Column Name in First Table,-,-,-,:
table2=T,12,N,Second Table in a Relationship,-,-,-,:
table2_key=T,16,N,Column Name in Second Table,-,-,-,:;

1	elevp	elevp.pft	end_id	end	id
2	elevp	end	id	elevp.pft	end_id
3	markersp	markersp.pft	end_id	end	id
4	markersp	end	id	markersp.pft	end_id
5	oasisp	oasisp.pft	end_id	end	id
6	oasisp	end	id	oasisp.pft	end_id
7	markersc	markersc.pft	cnd_id	cnd	id
8	markersc	cnd	id	markersc.pft	cnd_id
9	coastl	coastl.lft	id	coastl.ljt	coastl.lft_id
10	coastl	coastl.ljt	edg_id	edg	id
11	coastl	edg	id	coastl.ljt	edg_id
12	coastl	coastl.ljt	coastl.lft_id	coastl.lft	id
13	polbndl	polbndl.lft	id	polbndl.ljt	polbndl.lft_id
14	polbndl	polbndl.ljt	edg_id	edg	id
15	polbndl	edg	id	polbndl.ljt	edg_id
16	polbndl	polbndl.ljt	polbndl.lft_id	polbndl.lft	id
17	bndvoida	bndvoida.aft	id	bndvoida.ajt	bndvoida.aft_id
18	bndvoida	bndvoida.ajt	fac_id	fac	id
19	bndvoida	fac	id	bndvoida.ajt	fac_id
20	bndvoida	bndvoida.ajt	bndvoida.aft_id	bndvoida.aft	id
21	oasisa	oasisa.aft	id	oasisa.ajt	oasisa.aft_id
22	oasisa	oasisa.ajt	fac_id	fac	id
23	oasisa	fac	id	oasisa.ajt	fac_id
24	oasisa	oasisa.ajt	oasisa.aft_id	oasisa.aft	id
25	polbnda	polbnda.aft	id	polbnda.ajt	polbnda.aft_id
26	polbnda	polbnda.ajt	fac_id	fac	id
27	polbnda	fac	id	polbnda.ajt	fac_id
28	polbnda	polbnda.ajt	polbnda.aft_id	polbnda.aft	id
29	bndtxt	bndtxt.tft	txt_id	txt	id
30	bndtxt	txt	id	bndtxt.tft	txt_id

TABLE E-10. Elevation Point Feature Table.

Thematic Layer: Boundaries
Coverage Name: bnd
Feature Table Description: Elevation Point Feature Table
Table Name: elevp.pft
DQ Layer Number: 2

```
{Header length}L;
Elevation Point Feature Table;-;
id=I,1,P,Row Identifier,-,-,-,:
f_code=T,5,N,FACC Feature Code,char.vdt,-,-,:
acc=S,1,N,Accuracy Category,int.vdt,-,-,:
ela=S,1,N,Elevation Accuracy,int.vdt,-,-,:
mcc=S,1,N,Material Composition Category,int.vdt,-,-,:
zv2=S,1,N,Highest Z-value (meters),int.vdt,-,-,:
tile_id=S,1,N,Tile Reference ID,-,tile1_id.pti,-,:
end_id=I,1,N,Entity Node Primitive ID,-,end1_id.pti,-,:;
```

Column	Description	Value	Value Meaning	Applicable f_code for Each Attribute Value
id	Row Identifier	Sequential beginning with 1		
f_code	FACC Feature Code			
		CA030	Spot Elevation	
acc	Accuracy Category			
		0	Unknown	CA030
		1	Accurate	CA030
		2	Approximate	CA030
ela	Elevation Accuracy			
		0	Unknown	CA030
		1	Accurate	CA030
		2	Approximate	CA030
mcc	Material Composition Category			
		0	Unknown	CA030
		30	Earthen	CA030
		103	Snow/Ice	CA030
zv2	Highest Z-value (meters)			
		29999	Unknown	CA030
		-400 to 11999		CA030

TABLE E-11. Markers Point Feature Table.

Thematic Layer: Boundaries
Coverage Name: bnd
Feature Table Description: Markers Point Feature Table
Table Name: markersp.pft
DQ Layer Number: 2
Portrayal Criteria: AL025 must be landmark feature

```
{Header length}L;
Markers Point Feature Table;-;
id=I,1,P,Row Identifier,-,-,-,:
f_code=T,5,N,FACC Feature Code,char.vdt,f_code2.pti,-,:
cpa=S,1,N,Control Point Attribute,int.vdt,-,-,:
nam=T,*,N,Name,char.vdt,-,-,:
zv2=S,1,N,Highest Z-value (meters),int.vdt,-,-,:
tile_id=S,1,N,Tile Reference ID,-,tile2_id.pti,-,:
end_id=I,1,N,Entity Node Primitive ID,-,end2_id.pti,-,:;
```

Column	Description	Value	Value Meaning	Applicable f_code for Each Attribute Value
id	Row Identifier	Sequential beginning with 1		
f_code	FACC Feature Code			
		AL025	Cairn	
		ZB030	Boundary Monument	
		ZB035	Control Point/Control Station	
cpa	Control Point Attribute			
		-32768	Null	AL025, ZB030
		0	Unknown	ZB035
		1	Bench Mark	ZB035
		2	Horizontal	ZB035
		3	Horizontal with Bench Mark	ZB035
		5	Vertical	ZB035
nam	Name			
		Variable length text = 'zero-length' Null		AL025, ZB035
		Character text string		ZB030
		UNK	(No entry present)	ZB030
zv2	Highest Z-value (meters)			
		-32768	Null	AL025, ZB030
		29999	Unknown	ZB035
		-400 to 11999		ZB035

TABLE E-12. Oasis Point Feature Table.

Thematic Layer: Boundaries
Coverage Name: bnd
Feature Table Description: Oasis Point Feature Table
Table Name: oasisp.pft
DQ Layer Number: 2
Portrayal Criteria:
EC020 must be < 15625 square meters.

```
{Header length}L;
Oasis Point Feature Table;-;
id=I,1,P,Row Identifier,-,-,-,:
f_code=T,5,N,FACC Feature Code,char.vdt,-,-,:
veg=S,1,N,Vegetation Characteristic,int.vdt,-,-,:
tile_id=S,1,N,Tile Reference ID,-,tile3_id.pti,-,:
end_id=I,1,N,Entity Node Primitive ID,-,end3_id.pti,-,:;
```

Column	Description	Value	Value Meaning	Applicable f_code for Each Attribute Value
id	Row Identifier	Sequential beginning with 1		
f_code	FACC Feature Code			
		EC020	Oasis	
veg	Vegetation Characteristic			
		0	Unknown	EC020
		17	Palm	EC020

TABLE E-13. Markers Node Feature Table.

Thematic Layer: Boundaries
Coverage Name: bnd
Feature Table Description: Markers Node Feature Table
Table Name: markersc.pft
DQ Layer Number: 2

```
{Header length}L;
Markers Node Feature Table;-;
id=I,1,P,Row Identifier,-,-,-,:
f_code=T,5,N,FACC Feature Code,char.vdt,f_code1.nti,-,:
cpa=S,1,N,Control Point Attribute,int.vdt,-,-,:
nam=T,*,N,Name,char.vdt,-,-,:
zv2=S,1,N,Highest Z-value (meters),int.vdt,-,-,:
tile_id=S,1,N,Tile Reference ID,-,tile1_id.nti,-,:
cnd_id=I,1,N,Connected Node Primitive ID,-,cnd1_id.nti,-,:;
```

Column	Description	Value	Value Meaning	Applicable f_code for Each Attribute Value
id	Row Identifier	Sequential beginning with 1		
f_code	FACC Feature Code			
		ZB030	Boundary Monument	
		ZB035	Control Point/Control Station	
cpa	Control Point Attribute			
		-32768	Null	ZB030
		0	Unknown	ZB035
		1	Bench Mark	ZB035
		2	Horizontal	ZB035
		3	Horizontal with Bench Mark	ZB035
		5	Vertical	ZB035
nam	Name			
		Variable length text = 'zero-length' Null		ZB035
		Character text string		ZB030
		UNK	(No entry present)	ZB030
zv2	Highest Z-value (meters)			
		-32768	Null	ZB030
		29999	Unknown	ZB035
		-400 to 11999		ZB035

TABLE E-14 . Coastline Line Join Table.

(This table is used to combine linear boundary features with their associated edge primitives in a one-to-many relationship.)

```
{Header length}L;
Coastline Line Join Table;-;
id=I,1,P,Row Identifier,-,-,-,:
coastl.lft_id=I,1,N,Feature Key,-,coastl.jti,-,:
tile_id=S,1,N,Tile Reference ID,-,tile1_id.jti,-,:
edg_id=I,1,N,Edge Primitive ID,-,edg1_id.jti,-,:;
```

TABLE E-15. Coastline Line Feature Table.

Thematic Layer: Boundaries
Coverage Name: bnd
Feature Table Description: Coastline Line Feature Table
Table Name: coastl.lft
DQ Layer Number: 2

```
{Header length}L;
Coastline Line Feature Table;-;
id=I,1,P,Row Identifier,-,-,-,:
f_code=T,5,N,FACC Feature Code,char.vdt,-,-,:
acc=S,1,N,Accuracy Category,int.vdt,-,-,:
slt=S,1,N,Shoreline Type Category,int.vdt,-,-,:
vdc=S,1,N,Vertical Datum Category,int.vdt,-,-,:;
```

Column	Description	Value	Value Meaning	Applicable f_code for Each Attribute Value
id	Row Identifier	Sequential beginning with 1		
f_code	FACC Feature Code			
		BA010	Coastline/Shoreline	
acc	Accuracy Category			
		0	Unknown	BA010
		1	Accurate	BA010
		2	Approximate	BA010
slt	Shoreline Type Category			
		0	Unknown	BA010
		6	Mangrove/Nipa	BA010
		8	Marsh,Swamp	BA010
		10	Rocky	BA010
		11	Rubble	BA010
		13	Sandy	BA010
		14	Stony,Shingly	BA010
		15	Other	BA010

TABLE E-15. Coastline Line Feature Table (Continued).

vdc	Vertical Datum Category			
		0	Unknown	BA010
		7	Mean High Water	BA010
		9	Mean High Water Springs	BA010
		10	Mean Higher High Water	BA010
		15	Mean Sea Level	BA010
		24	Mean Higher High Water Springs	BA010
		26	Highest Normal High Water	BA010
		28	Highest High Water	BA010
		30	Indian Spring High Water	BA010
		999	Other	BA010

TABLE E-16. Political Boundary Line Join Table.

(This table is used to combine linear boundary features with their associated edge primitives in a one-to-many relationship.)

```
{Header length}L;
Political Boundary Line Join Table;-;
id=I,1,P,Row Identifier,-,-,-,:
polbndl.lft_id=I,1,N,Feature Key,-,polbndl.jti,-,:
tile_id=S,1,N,Tile Reference ID,-,tile2_id.jti,-,:
edg_id=I,1,N,Edge Primitive ID,-,edg2_id.jti,-,:;
```

TABLE E-17. Political Boundary Line Feature Table.

Thematic Layer: Boundaries
Coverage Name: bnd
Feature Table Description: Political Boundary Line Feature Table
Table Name: polbndl.lft
DQ Layer Number: 2
Portrayal Criteria: For FA000 and FA060 only international and first order boundaries are collected.

```
{Header length}L;
Political Boundary Line Feature Table;-;
id=I,1,P,Row Identifier,-,-,-,:
f_code=T,5,N,FACC Feature Code,char.vdt,f_code2.lti,-,:
acc=S,1,N,Accuracy Category,int.vdt,-,-,:
bst=S,1,N,Boundary Status Type,int.vdt,-,-,:
nm3=T,*,N,Name 3,char.vdt,-,-,:
nm4=T,*,N,Name 4,char.vdt,-,-,:
txt=T,*,N,Text Attribute,char.vdt,-,-,:
use=S,1,N,Usage,int.vdt,-,-,:;
```

Column	**Description**	**Value**	**Value Meaning**	**Applicable f_code for Each Attribute Value**
id	Row Identifier	Sequential beginning with 1		
f_code	FACC Feature Code			
		FA000	Administrative Boundary	
		FA020	Armistice Line	
		FA030	Cease-Fire Line	
		FA060	Defacto Boundary	
		FA110	International Date Line	

TABLE E-17. Political Boundary Line Feature Table (Continued).

acc	Accuracy Category			
		-32768	Null	FA110
		0	Unknown	FA000, FA020, FA030, FA060
		1	Accurate	FA000, FA020, FA030, FA060
		2	Approximate	FA000, FA020, FA030, FA060
		5	Disputed	FA000
		6	Undisputed	FA000
bst	Boundary Status Type			
		-32768	Null	FA020,FA030, FA060,FA110
		0	Unknown	FA000
		1	Definite	FA000
		2	Indefinite	FA000
		3	In Dispute	FA000
		4	No Defined Boundary	FA000
nm3	Name 3 (name of the political entity on one side of a boundary) Variable length text			
		= zero-length	Null	FA030, FA110
		Character text string		FA000, FA020, FA060
		UNK (No entry present)		FA000, FA020, FA060
nm4	Name 4 (name of the political entity on the other side of a boundary) Variable length text			
		= zero-length	Null	FA030, FA110
		Character text string		FA000, FA020, FA060
		UNK (No entry present)		FA000, FA020, FA060
txt	Text Attribute			
		Variable length text = zero-length	Null	FA000,FA020, FA030,FA110
		Character text string		FA060
		UNK (No entry present)		FA060
use	Usage			
		-32768	Null	FA020, FA030, FA110
		0	Unknown	FA000, FA060
		23	International	FA000, FA060
		26	Primary/1st Order	FA000, FA060

TABLE E-18. Boundaries Void Collection Area Join Table.
(This table is used to combine area boundary features with their associated face primitives in a one-to-many relationship.)

```
{Header length}L;
Boundaries Void Collection Area Join Table;-;
id=I,1,P,Row Identifier,-,-,-,:
bndvoida.aft_id=I,1,N,Feature Key,-,bndvoida.jti,-,:
tile_id=S,1,N,Tile Reference ID,-,tile3_id.jti,-,:
fac_id=I,1,N,Face Primitive ID,-,fac3_id.jti,-,:;
```

TABLE E-19. Boundaries Void Collection Area Feature Table.

Thematic Layer: Boundaries
Coverage Name: bnd
Feature Table Description: Boundaries Void Collection Area Feature Table
Table Name: bndvoida.aft
DQ Layer Number: 2
Portrayal Criteria: For ZD020 area >= 15,625 square meters

```
{Header length}L;
Boundaries Void Collection Area Feature Table;-;
id=I,1,P,Row Identifier,-,-,-,:
f_code=T,5,N,FACC Feature Code,char.vdt,-,-,:
vca=S,1,N,Void Collection Attribute,int.vdt,-,-,:;
```

Column	Description	Value	Value Meaning	Applicable f_code for Each Attribute Value
id	Row Identifier	Sequential beginning with 1		
f_code	FACC Feature Code			
		ZD020	Void Collection Area	
vca	Void Collection Attribute			
		0	Unknown	ZD020
		2	Area Too Rough to Collect	ZD020
		3	No Available Imagery	ZD020
		6	No Available Map Source	ZD020
		7	No Suitable Imagery	ZD020

TABLE E-20. Oasis Area Join Table.

(This table is used to combine area boundary features with their associated face primitives in a one-to-many relationship.)

```
{Header length}L;
Oasis Area Join Table;-;
id=I,1,P,Row Identifier,-,-,-,:
oasis.aft_id=I,1,N,Feature Key,-,oasisa.jti,-,:
tile_id=S,1,N,Tile Reference ID,-,tile4_id.jti,-,:
fac_id=I,1,N,Face Primitive ID,-,fac4_id.jti,-,:;
```

TABLE E-21. Oasis Area Feature Table.

Thematic Layer: Boundaries
Coverage Name: bnd
Feature Table Description: Oasis Area Feature Table
Table Name: oasisa.aft
DQ Layer Number: 2
Portrayal Criteria: EC020 must be => 15625 square meters.

```
{Header length}L;
Oasis Area Feature Table;-;
id=I,1,P,Row Identifier,-,-,-,:
f_code=T,5,N,FACC Feature Code,char.vdt,-,-,:
```

Column	Description	Value	Value Meaning	Applicable f_code for Each Attribute Value
id	Row Identifier	Sequential beginning with 1		
f_code	FACC Feature Code			
		EC020	Oasis	

TABLE E-22 . Political Boundary Area Join Table.

(This table is used to combine area boundary features with their associated face primitives in a one-to-many relationship.)

```
{Header length}L;
Political Boundary Area Join Table;-;
id=I,1,P,Row Identifier,-,-,-,:
polbnda.aft_id=I,1,N,Feature Key,-,polbnda.jti,-,:
tile_id=S,1,N,Tile Reference ID,-,tile5_id.jti,-,:
fac_id=I,1,N,Face Primitive ID,-,fac5_id.jti,-,:;
```

TABLE E-23. Political Boundary Area Feature Table.

Thematic Layer: Boundaries
Coverage Name: bnd
Feature Table Description: Political Boundary Area Feature Table
Table Name: polbnda.aft
DQ Layer Number: 2

```
{Header length}L;
Political Boundary Area Feature Table;-;
id=I,1,P,Row Identifier,-,-,-,:
f_code=T,5,N,FACC Feature Code,char.vdt,f_code5.ati,-,:
acc=S,1,N,Accuracy Category,int.vdt,-,-,:
nam=T,*,N,Name,char.vdt,-,-,:;
```

Column	Description	Value	Value Meaning	Applicable f_code for Each Attribute Value
id	Row Identifier	Sequential beginning with 1		
f_code	FACC Feature Code			
		FA070	Demilitarized Zone	
		FA170	Zone of Occupation	
acc	Accuracy Category			
		0	Unknown	FA070,FA170
		1	Accurate	FA070,FA170
		2	Approximate	FA070,FA170
nam	Name			
		Variable length text = zero-length	Null	FA070
		Character text string		FA170
		UNK (No entry present)		FA170

TABLE E-24. Boundaries Text Feature Table.

Thematic Layer:	Boundaries
Coverage Name:	bnd
Feature Table Description:	Boundaries Text Feature Table
Table Name:	bndtxt.tft
DQ Layer Number:	2

```
{Header length}L;
Boundaries Text Feature Table;-;
id=I,1,P,Row Identifier,-,-,-,:
f_code=T,5,N,FACC Feature Code,char.vdt,f_code.tti,-
,:
tile_id=S,1,N,Tile Reference ID,-,tile_id.tti,-,:
txt_id=I,1,N,Text Primitive ID,-,txt_id.tti,-,:;
```

Column	**Description**	**Value**	**Value Meaning**	**Applicable f_code for Each Attribute Value**
id	Row Identifier	Sequential beginning with 1		
f_code	FACC Feature Code			
		ZD040	Named Location	
		ZD045	Text Description	

TABLE E-25. Boundaries Feature Class Attribute Table.

Thematic Layer: Boundaries
Coverage Name: bnd
Table Description: Boundaries Feature Class Attribute Table
Table Name: fca
DQ Layer Number: 2

```
{Header length}L;
Boundaries Feature Class Attribute Table;-;
id=I,1,P,Row Identifier,-,-,-,:
fclass=T,8,U,Feature Class Name,-,-,-,:
type=T,1,N,Feature Type,char.vdt,-,-,:
descr=T,*,N,Description,-,-,-,:;
```

Column	Description	Value	Value Meaning	Applicable Feature Class for Each Attribute Value
id	Row Identifier	Sequential beginning with 1		
fclass	Feature Class Name			
		elevp		
		markersp		
		oasisp		
		markersc		
		coastl		
		polbndl		
		bndvoida		
		oasisa		
		polbnda		
		bndtxt		
type	Feature Type			
		P	Point/Node Feature	elevp, markersp, oasisp, markersc
		L	Line Feature	coastl, polbndl
		A	Area Feature	bndvoida, oasisa, polbnda
		T	Text Feature	bndtxt
descr	Description			
		Spot Elevations		elevp
		Point Markers		markersp
		Oasis		oasisp
		Node Markers		markersc
		Coastlines		coastl
		Political Boundaries		polbndl
		Boundaries Void Collection Areas		bndvoida
		Oasis		oasisa
		Administrative Areas		polbnda
		Boundaries Coverage Text		bndtxt

TABLE E-26. Boundaries Character Value Description Table.

Thematic Layer: Boundaries
Coverage Name: bnd
Feature Table Description: Boundaries Character Value Description Table
Table Name: char.vdt
DQ Layer Number: 2

{Header length}L;
Boundaries Character Value Description Table;-;
id=I,1,P,Row Identifier,-,-,-,:
table=T,12,N,Name of the Feature Table,-,-,-,:
attribute=T,6,N,Column Name,-,-,-,:
value=T,5,N,Unique Value of Attribute,-,-,-,:
description=T,*,N,Description of Value,-,-,-,:;

1	elevp.pft	f_code	CA030	Spot Elevation
2	markersp.pft	f_code	AL025	Cairn
3	markersp.pft	f_code	ZB030	Boundary Monument
4	markersp.pft	f_code	ZB035	Control Point/Control Station
5	markersp.pft	nam	UNK	No entry present
6	oasisp.pft	f_code	EC020	Oasis
7	markersc.pft	f_code	ZB030	Boundary Monument
8	markersc.pft	f_code	ZB035	Control Point/Control Station
9	markersc.pft	nam	UNK	No entry present
10	coastl.lft	f_code	BA010	Coastline/Shoreline
11	polbndl.lft	f_code	FA000	Administrative Boundary
12	polbndl.lft	f_code	FA020	Armistice Line
13	polbndl.lft	f_code	FA030	Cease-Fire Line
14	polbndl.lft	f_code	FA060	Defacto Boundary
15	polbndl.lft	f_code	FA110	International Date Line
16	polbndl.lft	nm3	UNK	No entry present
17	polbndl.lft	nm4	UNK	No entry present
18	polbndl.lft	txt	UNK	No entry present
19	bndvoida.aft	f_code	ZD020	Void Collection Area
20	oasisa.aft	f_code	EC020	Oasis
21	polbnda.aft	f_code	FA070	Demilitarized Zone
22	polbnda.aft	f_code	FA170	Zone of Occupation
23	polbnda.aft	nam	UNK	No entry present
24	bndtxt.tft	f_code	ZD040	Named Location
25	bndtxt.tft	f_code	ZD045	Text Description
26	fca	type	A	Area Feature
27	fca	type	L	Line Feature
28	fca	type	P	Point/Node Feature
29	fca	type	T	Text Feature

E.3.3.1 Boundaries coverage glossary.

AL025 Cairn (P) A heap of stones piled up as a memorial or a landmark.

BA010 Coastline/Shoreline (L) The line where a land mass is in contact with a body of water.
ACC Accuracy Category (L) Accuracy of geographic position.
SLT Shoreline Type Category (L) The physical characteristic of shoreline area.
VDC Vertical Datum Category (L) The reference line (0 elevation) from which heights and depths are measured.

CA030 Spot Elevation (P) designated location with an elevation value relative to a vertical datum.
ACC Accuracy Category (P) Accuracy of geographic position.
ELA Elevation Accuracy (P) Indicates whether the ZVL value is accurately known.
MCC Material Composition Category (P) Characteristics of primary material composition of feature.
ZV2 Highest Z-Value (meters)(P) Elevation above a given datum to the highest portion of the feature.

EC020 Oasis (P,A) A small isolated fertile, or green area in a desert region usually having a spring or well.
VEG Vegetation Characteristic (P) Type of Plant or Plantings.

FA000 Administrative Boundary (L) A line of demarcation between controlled areas.
ACC Accuracy Category (L) Accuracy of geographic position.
BST Boundary Status Type (L) Identifies the status of a boundary.
NM3 Name 3 (L) Name of the political entity on one side of the boundary.
NM4 Name 4 (L) Name of the political entity on the other side of the boundary.
USE Usage (L) Use (Identifies the primary user, function, or controlling authority).

FA020 Armistice Line (L) A line established by opposing groups as a result of cessation of hostilities.
ACC Accuracy Category (L) Accuracy of geographic position.
NM3 Name 3 (L) Name of the political entity on one side of the boundary.
NM4 Name 4 (L) Name of the political entity on the other side of the boundary.

FA030 Cease-Fire Line (L) A line along which active hostilities are suspended.
ACC Accuracy Category (L) Accuracy of geographic position.

FA060 Defacto Boundary (L) An existing line of separation not officially recognized by various governments.
ACC Accuracy Category (L) Accuracy of geographic position.
NM3 Name 3 (L) Name of the political entity on one side of the boundary.
NM4 Name 4 (L) Name of the political entity on the other side of the boundary.
TXT Text Attribute (L) Narrative or other description.
USE Usage (L) Use (Identifies the primary user, function, or controlling authority).

FA070 Demilitarized Zone (A) An area where military activity is prohibited.

ACC Accuracy Category (A) Accuracy of geographic position.

FA110 International Date Line (L) A line generally coinciding with the 180th meridian, modified to avoid land, and designated as the place where each calendar day begins.

FA170 Zone of Occupation (A) An area temporarily held and controlled by a foreign military force.
ACC Accuracy Category (A) Accuracy of geographic position.
NAM Name (A) Any Identifier or code.

ZB030 Boundary Monument (P,N) A marker identifying the location of a surveyed boundary line.
NAM Name (P,N) Any Identifier or code.

ZB035 Control Point/Control Station (P,N) A temporary object or mark on the ground of known position, elevation, or both.
CPA Control Point Attribute (P,N) Type of control point.
ZV2 Highest Z-Value (meters) (P,N) Elevation above a given datum to the highest portion of the feature.

ZD020 Void Collection Area (A) An area lacking suitable source coverage, or where data is not required.
VCA Void Collection Attribute (A) Reason data is not collected.

ZD040 Named Location (T) A geographic place on earth, not normally appearing as a feature on a map, but having a name that is required to be placed on a map.

ZD045 Text Description (T) An area in which a characteristic or an activity pertaining to the area can be described and possibly is labeled on a product if deemed important at the time the product is being produced.

TABLE E-27. Boundaries Integer Value Description Table.

Thematic Layer: Boundaries
Coverage Name: bnd
Feature Table Description: Boundaries Integer Value Description Table
Table Name: int.vdt
DQ Layer Number: 2

{Header length}L;
Boundaries Integer Value Description Table;-;
id=I,1,P,Row Identifier,-,-,-,:
table=T,12,N,Name of the Feature Table,-,-,-,:
attribute=T,3,N,Column Name,-,-,-,:
value=S,1,N,Unique Value of Attribute,-,-,-,:
description=T,*,N,Description of Value,-,-,-,:;

1	elevp.pft	acc	0	Unknown
2	elevp.pft	acc	1	Accurate
3	elevp.pft	acc	2	Approximate
4	elevp.pft	ela	0	Unknown
5	elevp.pft	ela	1	Accurate
6	elevp.pft	ela	2	Approximate
7	elevp.pft	mcc	0	Unknown
8	elevp.pft	mcc	30	Earthen
9	elevp.pft	mcc	103	Snow/Ice
10	elevp.pft	zv2	29999	Unknown
11	markersp.pft	cpa	0	Unknown
12	markersp.pft	cpa	1	Bench Mark
13	markersp.pft	cpa	2	Horizontal
14	markersp.pft	cpa	3	Horizontal with Bench Mark
15	markersp.pft	cpa	5	Vertical
16	markersp.pft	zv2	29999	Unknown
17	oasisp.pft	veg	0	Unknown
18	oasisp.pft	veg	17	Palm
19	markersc.pft	cpa	0	Unknown
20	markersc.pft	cpa	1	Bench Mark
21	markersc.pft	cpa	2	Horizontal
22	markersc.pft	cpa	3	Horizontal with Bench Mark
23	markersc.pft	cpa	5	Vertical
24	markersc.pft	zv2	29999	Unknown
25	coastl.lft	acc	0	Unknown
26	coastl.lft	acc	1	Accurate
27	coastl.lft	acc	2	Approximate
28	coastl.lft	slt	0	Unknown
29	coastl.lft	slt	6	Mangrove/Nipa
30	coastl.lft	slt	8	Marsh,Swamp
31	coastl.lft	slt	10	Rocky
32	coastl.lft	slt	11	Rubble
33	coastl.lft	slt	13	Sandy
34	coastl.lft	slt	14	Stony,Shingly
35	coastl.lft	slt	15	Other
36	coastl.lft	vdc	0	Unknown
37	coastl.lft	vdc	7	Mean High Water
38	coastl.lft	vdc	9	Mean High Water Springs

TABLE E-27. Boundaries Integer Value Description Table (Continued).

39	coastl.lft	vdc	10	Mean Higher High Water
40	coastl.lft	vdc	15	Mean Sea Level
41	coastl.lft	vdc	24	Mean Higher High Water Springs
42	coastl.lft	vdc	26	Highest Normal High Water
43	coastl.lft	vdc	28	Highest High Water
44	coastl.lft	vdc	30	Indian Spring High Water
45	coastl.lft	vdc	999	Other
46	polbndl.lft	acc	0	Unknown
47	polbndl.lft	acc	1	Accurate
48	polbndl.lft	acc	2	Approximate
49	polbndl.lft	acc	5	Disputed
50	polbndl.lft	acc	6	Undisputed
51	polbndl.lft	bst	0	Unknown
52	polbndl.lft	bst	1	Definite
53	polbndl.lft	bst	2	Indefinite
54	polbndl.lft	bst	3	In Dispute
55	polbndl.lft	bst	4	No Defined Boundary
56	polbndl.lft	use	0	Unknown
57	polbndl.lft	use	23	International
58	polbndl.lft	use	26	Primary/1st Order
59	bndvoida.aft	vca	0	Unknown
60	bndvoida.aft	vca	2	Area Too Rough to Collect
61	bndvoida.aft	vca	3	No Available Imagery
62	bndvoida.aft	vca	6	No Available Map Source
63	bndvoida.aft	vca	7	No Suitable Imagery
64	polbnda.aft	acc	0	Unknown
65	polbnda.aft	acc	1	Accurate
66	polbnda.aft	acc	2	Approximate

E.3.4 Data quality coverage. A Data Quality coverage may be implemented as shown in TABLES 93–105. This coverage may contain information that affects the entire database. It may also contain information that pertains to particular coverages, feature classes, or even to particular features. For example, the line feature table DQLINE.LFT (TABLE 89) and line related attribute table DQLINE.RAT (TABLE 90) are used to describe data quality conditions that result from the edge matching of two source sheets.

TABLE E-28. Content and Format for Data Quality Coverage Feature Class Schema Table.

Thematic Layer:	Data Quality
Coverage Name:	dq
Feature Table Description:	Data Quality Feature Class Schema Table
Table Name:	fcs
DQ Layer Number:	Not Applicable

{Header length}L;
Data Quality Feature Class Schema Table;-;
id=I,1,P,Row Identifier,-,-,-,:
feature_class=T,8,N,Name of Feature Class,-,-,-,:
table1=T,12,N,First Table,-,-,-,:
table1_key=T,16,N,Column Name in First Table,-,-,-,:
table2=T,12,N,Second Table,-,-,-,:
table2_key=T,16,N,Column Name in Second Table,-,-,-,:;

1	dqline	dqline.lft	id	dqline.ljt	dqline.lft_id
2	dqline	dqline.ljt	edg_id	edg	id
3	dqline	edg	id	dqline.ljt	edg_id
4	dqline	dqline.ljt	dqline.lft_id	dqline.lft	id
5	dqline	dqline.lft	dqline_id	dqline.rat	dqline_id
6	dqline	dqline.rat	dqline_id	dqline.lft	dqline_id
7	dqarea	dqarea.aft	id	dqarea.ajt	dqarea.aft_id
8	dqarea	dqarea.ajt	fac_id	fac	id
9	dqarea	fac	id	dqarea.ajt	fac_id
10	dqarea	dqarea.ajt	dqarea.aft_id	dqarea.aft	id
11	dqarea	dqarea.aft	rat_id	dqarea.rat	id
12	dqarea	dqarea.rat	id	dqarea.aft	rat_id
13	dqvoida	dqvoida.aft	id	dqvoida.ajt	dqvoida.aft_id
14	dqvoida	dqvoida.ajt	fac_id	fac	id
15	dqvoida	fac	id	dqvoida.ajt	fac_id
16	dqvoida	dqvoida.ajt	dqvoida.aft_id	dqvoida.aft	id
17	dqtxt	dqtxt.tft	txt_id	txt	id
18	dqtxt	txt	id	dqtxt.tft	txt_id

TABLE E-29. Data Quality Line Join Table.
(This table is used to combine line features with their associated edge primitives in a one-to-many relationship.)

```
{Header length}L;
Data Quality Line Join Table;-;
id=I,1,P,Row Identifier,-,-,-,:
dqline.lft_id=I,1,N,Feature Key,-,dqline.jti,-,:
tile_id=S,1,N,Tile Reference ID,-,tile1_id.jti,-,:
edg_id=I,1,N,Edge Primitive ID,-,edg1_id.jti,-,:;
```

TABLE E-30. Data Quality Line Feature Table.

Thematic Layer: Data Quality
Coverage Name: dq
Feature Table Description: Data Quality Line Feature Table
Table Name: dqline.lft
DQ Layer Number: Not Applicable

```
{Header length}L;
Data Quality Line Feature Table;-;
id=I,1,P,Row Identifier,-,-,-,:
dqline_id=I,1,N,Line Feature Identifier,-,-,-,:
source1=T,12,N,First Source Sheet or Data ID,-,-,-,:
source2=T,12,N,Second Source Sheet or Data ID,-,-,-,:;
```

Column	Description	Value	Value Meaning
id	Row Identifier	Sequential beginning with 1	
dqline_id	Line Feature Identifier		Data quality line feature identifier
source1	First Source Sheet or Data Identifier		This item contains the name of the first TLM map sheet number or other source where a line feature crosses and requires a data quality description (see dqline.rat). (e.g., 6446 II V782)
source2	Second Source Sheet or Data Identifier		This item contains the name of the second TLM map sheet number or other source where a line feature crosses and requires a data quality description (see dqline.rat). (e.g., 6446 I V782)

TABLE E-31. Data Quality Line Related Attribute Table.

Thematic Layer:	Data Quality
Coverage Name:	dq
Feature Table Description:	Data Quality Line Related Attribute Table
Table Name:	dqline.rat
DQ Layer Number:	Not Applicable

```
{Header length}L;
Data Quality Line Related Attribute Table;-;
id=I,1,P,Row Identifier,-,-,-,:
dqline_id=I,1,N,Line Feature Identifier,-,-,-,:
cover=T,5,N,Data Quality Thematic Layer,-,-,-,:
dqdescr=T,*,N,DQ Description for Line Feature,-,-,-,:;
```

Column	Description	Value	Value Meaning
id	Row Identifier	Sequential beginning with 1	
dqline_id	Line Feature Identifier		Relate item to the dqline.lft.
cover	Data Quality Thematic Layer		This is the thematic layer identifier for each layer in the database.
dqdescr	Data Quality Description for Line Feature		This item contains a text string describing specific conditions occurring within the database for a particular line feature. Typically this refers to edgematch problems observed between two source maps and identifies any steps taken to ameliorate the problem.

TABLE E-32. Data Quality Area Join Table.
(This table is used to combine area data quality features with their associated face primitives in a one-to-many relationship.)

```
{Header length}L;
Data Quality Area Join Table;-;
id=I,1,P,Row Identifier,-,-,-,:
dqarea.aft_id=I,1,N,Feature Key,-,dqarea.jti,-,:
tile_id=S,1,N,Tile Reference ID,-,tile2_id.jti,-,:
fac_id=I,1,N,Face Primitive ID,-,fac2_id.jti,-,:;
```

TABLE E-33. Data Quality Area Feature Table.

Thematic Layer:	Data Quality
Coverage Name:	dq
Feature Table Description:	Data Quality Area Feature Table
Table Name:	dqarea.aft
DQ Layer Number:	Not Applicable

```
{Header length}L;
Data Quality Area Feature Table;-;
id=I,1,P,Row Identifier,-,-,-,:
rat_id=S,1,N,Related Attribute Identifier,-,-,-,:
source_id=T,35,N,Source ID Number,-,-,-,:
edition=T,10,N,Map Sheet Edition,-,-,-,:
comp_date=D,1,N,Compilation Date,-,-,-,:
rev_date=D,1,N,Map Revision Date,-,-,-,:
print_date=D,1,N,Map Print Date,-,-,-,:
source_info=T,*,N,General Source Information,-,-,-,:;
```

Column	Description	Value	Value Meaning
id	Row Identifier	Sequential beginning with 1	
rat_id	Related Attribute Identifier		Relates area feature to related attribute table
source_id	Source Identification Number		Alphanumeric String of the TLM, other Map Sheet, or Source Name or Identification Number
edition	Map Sheet Edition		Alphanumeric String of the Map Sheet Edition
comp_date	Compilation Date		Appropriate date value of source or space character filled if null
rev_date	Map Revision Date		Appropriate date value or space character filled if null

TABLE E-33. Data Quality Area Feature Table (Continued).

print_date	Map Print Date	Appropriate date value or space character filled if null
source_info	General Source Information	Contains a description of conditions occurring in the database, such as sheet-wide phenomena, regional phenomena, or marginalia.

TABLE E-34. Data Quality Area Related Attribute Table.

Thematic Layer: Data Quality
Coverage Name: dq
Feature Table Description: Data Quality Area Related Attribute Table
Table Name: dqarea.rat
DQ Layer Number: Not Applicable

```
{Header length}L;
Data Quality Area Related Attribute Table;-;
id=I,1,P,Row Identifier,-,-,-,:
cover=T,5,N,Data Quality Thematic Layer,-,-,-,:
dqdescr=T,*,N,DQ Description for Area Feature,-,-,-,:;
```

Column	Description	Value	Value Meaning
id	Row Identifier	Sequential beginning with 1	
cover	Data Quality Thematic Layer		This is the thematic layer identifier for each layer in the database.
dqdescr	Data Quality Description for Area Feature		This item contains a text string describing specific conditions occurring within the database for a particular polygon feature. Typically this refers to edgematch problems observed between two source maps and identifies any steps taken to resolve the problem.

TABLE E-35. Data Quality Void Collection Area Join Table.
(This table is used to combine area data quality features with their associated face primitives in a one-to-many relationship.)

```
{Header length}L;
Data Quality Void Collection Area Join Table;-;
id=I,1,P,Row Identifier,-,-,-,:
dqvoida.aft_id=I,1,N,Feature Key,-,dqvoida.jti,-,:
tile_id=S,1,N,Tile Reference ID,-,tile3_id.jti,-,:
fac_id=I,1,N,Face Primitive ID,-,fac3_id.jti,-,:;
```

TABLE E-36. Data Quality Void Collection Area Feature Table.

Thematic Layer: Data Quality
Coverage Name: dq
Feature Table Description: Data Quality Void Collection Area Feature Table
Table Name: dqvoida.aft
DQ Layer Number: Not Applicable
Portrayal Criteria: For ZD020 area >= 15,625 square meters. If void collection area applies to all data coverages, this coverage and feature class will be used, instead of implementing similar feature classes in each coverage.

```
{Header length}L;
Data Quality Void Collection Area Feature Table;-;
id=I,1,P,Row Identifier,-,-,-,:
f_code=T,5,N,FACC Feature Code,char.vdt,-,-,:
vca=S,1,N,Void Collection Attribute,int.vdt,-,-,:
vct=S,1,N,Void Collection Type,int.vdt,-,-,:;
```

Column	Description	Value	Value Meaning	Applicable f_code for Each Attribute Value
id	Row Identifier	Sequential beginning with 1		
f_code	FACC Feature Code			
		ZD020	Void Collection Area	
vca	Void Collection Attribute			
		0	Unknown	ZD020
		2	Area Too Rough to Collect	ZD020
		3	No Available Imagery	ZD020
		6	No Available Map Source	ZD020
		7	No Suitable Imagery	ZD020
vct	Void Collection Type			
		0	Unknown	ZD020
		1	Relief	ZD020
		2	Other	ZD020

TABLE E-37. Data Quality Text Feature Table.

Thematic Layer: Data Quality
Coverage Name: dq
Feature Table Description: Data Quality Text Feature Table
Table Name: dqtxt.tft
DQ Layer Number: Not Applicable

```
{Header length}L;
Data Quality Text Feature Table;-;
id=I,1,P,Row Identifier,-,-,-,:
f_code=T,5,N,FACC Feature Code,char.vdt,-,-,:
tile_id=S,1,N,Tile Reference ID,-,tile_id.tti,-,:
txt_id=I,1,N,Text Primitive ID,-,txt_id.tti,-,:;
```

Column	Description	Value	Value Meaning	Applicable f_code for Each Attribute Value
id	Row Identifier	Sequential beginning with 1		
f_code	FACC Feature Code			
		ZD045	Text Description	

TABLE E-38. Data Quality Feature Class Attribute Table.

Thematic Layer: Data Quality
Coverage Name: dq
Table Description: Data Quality Feature Class Attribute Table
Table Name: fca
DQ Layer Number: Not Applicable

```
{Header length}L;
Data Quality Feature Class Attribute Table;-;
id=I,1,P,Row Identifier,-,-,-,:
fclass=T,8,U,Feature Class Name,-,-,-,:
type=T,1,N,Feature Type,char.vdt,-,-,:
descr=T,*,N,Description,-,-,-,:;
```

Column	Description	Value	Value Meaning	Applicable Feature Class for Each Attribute Value
id	Row Identifier	Sequential beginning with 1		
fclass	Feature Class Name			
		dqline		
		dqarea		
		dqvoida		
		dqtxt		
type	Feature Type			
		L	Line Feature	dqline
		A	Area Feature	dqarea, dqvoida
		T	Text Feature	dqtxt
descr	Description			
		Data Quality for Line Features		dqline
		Data Quality for Area Features		dqarea
		Data Quality Void Collection Area		dqvoida
		Data Quality Coverage Text		dqtxt

TABLE E-39. Data Quality Character Value Description Table.

Thematic Layer: Data Quality
Coverage Name: dq
Feature Table Description: Data Quality Character Value Description Table
Table Name: char.vdt
DQ Layer Number: Not Applicable

{Header length}L;
Data Quality Character Value Description Table;-;
id=I,1,P,Row Identifier,-,-,-,:
table=T,12,N,Name of the Feature Table,-,-,-,:
attribute=T,6,N,Column Name,-,-,-,:
value=T,5,N,Unique Value of Attribute,-,-,-,:
description=T,*,N,Description of Value,-,-,-,:;

1	dqvoida.aft	f_code	ZD020	Void Collection Area
2	dqtxt.tft	f_code	ZD045	Text Description
3	fca	type	A	Area Feature
4	fca	type	L	Line Feature
5	fca	type	T	Text Feature

TABLE E-40. Data Quality Integer Value Description Table.

Thematic Layer: Data Quality
Coverage Name: dq
Feature Table Description: Data Quality Integer Value Description Table
Table Name: int.vdt
DQ Layer Number: Not Applicable

{Header length}L;
Data Quality Integer Value Description Table;-;
id=I,1,P,Row Identifier,-,-,-,:
table=T,12,N,Name of the Feature Table,-,-,-,:
attribute=T,3,N,Column Name,-,-,-,:
value=S,1,N,Unique Value of Attribute,-,-,-,:
description=T,*,N,Description of Value,-,-,-,:;

1	dqvoida.aft	vca	0	Unknown
2	dqvoida.aft	vca	2	Area Too Rough to Collect
3	dqvoida.aft	vca	3	No Available Imagery
4	dqvoida.aft	vca	6	No Available Map Source
5	dqvoida.aft	vca	7	No Suitable Imagery
6	dqvoida.aft	vct	0	Unknown
7	dqvoida.aft	vct	1	Relief
8	dqvoida.aft	vct	2	Other

E.3.5 Hydrography coverage

TABLE E-41. Content and format for Hydrography coverage feature class schema table.

Thematic Layer: Hydrography
Coverage Name: hydro
Feature Table Description: Hydrography Feature Class Schema Table
Table Name: fcs
DQ Layer Number: 3

{Header length}L;
Hydrography Feature Class Schema Table;-;
id=I,1,P,Row Identifier,-,-,-,:
feature_class=T,8,N,Name of Feature Class,-,-,-,:
table1=T,12,N,First Table,-,-,-,:
table1_key=T,16,N,Column Name in First Table,-,-,-,:
table2=T,12,N,Second Table,-,-,-,:
table2_key=T,16,N,Column Name in Second Table,-,-,-,:;

1	dangerp	dangerp.pft	end_id	end	id
2	dangerp	end	id	dangerp.pft	end_id
3	wellp	wellp.pft	end_id	end	id
4	wellp	end	id	wellp.pft	end_id
5	reefl	reefl.lft	id	reefl.ljt	reefl.lft_id
6	reefl	reefl.ljt	edg_id	edg	id
7	reefl	edg	id	reefl.ljt	edg_id
8	reefl	reefl.ljt	reefl.lft_id	reefl.lft	id
9	seastrtl	seastrtl.lft	id	seastrtl.ljt	seastrtl.lft_id
10	seastrtl	seastrtl.ljt	edg_id	edg	id
11	seastrtl	edg	id	seastrtl.ljt	edg_id
12	seastrtl	seastrtl.ljt	seastrtl.lft_id	seastrtl.lft	id
13	coasta	coasta.aft	id	coasta.ajt	coasta.aft_id
14	coasta	coasta.ajt	fac_id	fac	id
15	coasta	fac	id	coasta.ajt	fac_id
16	coasta	coasta.ajt	coasta.aft_id	coasta.aft	id
17	dangera	dangera.aft	id	dangera.ajt	dangera.aft_id
18	dangera	dangera.ajt	fac_id	fac	id
19	dangera	fac	id	dangera.ajt	fac_id
20	dangera	dangera.ajt	dangera.aft_id	dangera.aft	id
21	seastrta	seastrta.aft	id	seastrta.ajt	seastrta.aft_id
22	seastrta	seastrta.ajt	fac_id	fac	id
23	seastrta	fac	id	seastrta.ajt	fac_id
24	seastrta	seastrta.ajt	seastrta.aft_id	seastrta.aft	id
25	hydvoida	hydvoida.aft	id	hydvoida.ajt	hydvoida.aft_id
26	hydvoida	hydvoida.ajt	fac_id	fac	id
27	hydvoida	fac	id	hydvoida.ajt	fac_id
28	hydvoida	hydvoida.ajt	hydvoida.aft_id	hydvoida.aft	id
29	hydrotxt	hydrotxt.tft	txt_id	txt	id
30	hydrotxt	txt	id	hydrotxt.tft	txt_id

TABLE E-42. Danger Point Feature Table.

Thematic Layer: Hydrography
Coverage Name: hydro
Feature Table Description: Danger Point Feature Table
Table Name: dangerp.pft
DQ Layer Number: 3
Portrayal Criteria: For BD100 ARA <2500 square meters, and BD180 is landmark feature

```
{Header length}L;
Danger Point Feature Table;-;
id=I,1,P,Row Identifier,-,-,-,:
f_code=T,5,N,FACC Feature Code,char.vdt,f_code2.pti,-,:
hdi=S,1,N,Hydrographic Depth/Height Information,int.vdt,-,-,:
len=S,1,N,Length/Diameter (meters),int.vdt,-,-,:
loc=S,1,N,Location Category,int.vdt,-,-,:
mcc=S,1,N,Material Composition Category,int.vdt,-,-,:
nam=T,*,N,Name,char.vdt,-,-,:
vrr=S,1,N,Vertical Reference Category,int.vdt,-,-,:
tile_id=S,1,N,Tile Reference ID,-,tile2_id.pti,-,:
end_id=I,1,N,Entity Node Primitive ID,-,end2_id.pti,-,:;
```

Column	Description	Value	Value Meaning	Applicable f_code for Each Attribute Value
id	Row Identifier	Sequential beginning with 1		
f_code	FACC Feature Code			
		BD100	Pile/Piling/Post	
		BD130	Rock	
		BD180	Wreck	
hdi	Hydrographic Depth/Height Information			
		-32768	Null	BD100,BD180
		0	Unknown	BD130
		26	Uncovering Height Known	BD130
		27	Uncovering Height Unknown	BD130
len	Length/Diameter (meters)			
		-32768	Null	BD100,BD180
		0	Unknown	BD130
		1 to no upper limit		BD130

TABLE E-42. Danger Point Feature Table (Continued).

loc	Location Category			
		-32768	Null	BD100,BD130
		0	Unknown	BD180
		13	Hull Showing	BD180
		14	Masts Showing	BD180
		20	Funnel Showing	BD180
		21	Superstructure Showing	BD180
		28	Masts and Funnel Showing	BD180
mcc	Material Composition Category			
		-32768	Null	BD100,BD180
		0	Unknown	BD130
		24	Coral	BD130
		84	Rock/Rocky	BD130
nam	Name			
		Variable length text = zero-length	Null	BD100,BD180
		Character text string		BD130
		UNK (No entry present)		BD130
vrr	Vertical Reference Category			
		0	Unknown	BD100,BD130, BD180
		1	Above Surface/Does not cover (At High Water)	BD100,BD180
		2	Awash at Sounding Datum	BD130
		8	Covers and Uncovers	BD100,BD130

TABLE E-43. Well Point Feature Table.

Thematic Layer: Hydrography
Coverage Name: hydro
Feature Table Description: Well Point Feature Table
Table Name: wellp.pft
DQ Layer Number: 3
Portrayal Criteria: For this coverage AA050 must be a prominent water well.

```
{Header length}L;
Well Point Feature Table;-;
id=I,1,P,Row Identifier,-,-,-,:
f_code=T,5,N,FACC Feature Code,char.vdt,-,-,:
exs=S,1,N,Existence Category,int.vdt,-,-,:
hyc=S,1,N,Hydrological Category,int.vdt,-,-,:
nam=T,*,N,Name,char.vdt,-,-,:
pro=S,1,N,Product Category,int.vdt,-,-,:
scc=S,1,N,Spring/Well Characteristic Category,int.vdt,-,-,:
wft=S,1,N,Well Feature Type,int.vdt,-,-,:
ywq=S,1,N,Water Quality Attribute,int.vdt,-,-,:
tile_id=S,1,N,Tile Reference ID,-,tile4_id.pti,-,:
end_id=I,1,N,Entity Node Primitive ID,-,end4_id.pti,-,:;
```

Column	Description	Value	Value Meaning	Applicable f_code for Each Attribute Value
id	Row Identifier	Sequential beginning with 1		
f_code	FACC Feature Code			
		AA050	Well	
exs	Existence Category			
		0	Unknown	AA050
		3	Reported	AA050
		6	Abandoned/Disused	AA050
		28	Operational	AA050
hyc	Hydrological Category			
		0	Unknown	AA050
		3	Dry	AA050
		6	Non-Perennial/ Intermittent/ Fluctuating	AA050
		8	Perennial/Permanent	AA050
nam	Name			
		Character text string		AA050
		UNK (No entry present)		AA050

TABLE E-43. Well Point Feature Table (Continued).

pro	Product Category			
		0	Unknown	AA050
		116	Water	AA050
scc	Spring/Well Characteristic Category			
		0	Unknown	AA050
		1	Alkaline	AA050
		4	Mineral	AA050
		9	Freshwater/Potable	AA050
wft	Well Feature Type			
		0	Unknown	AA050
		2	Walled-in Spring	AA050
		3	Artesian Well	AA050
		4	Fountain	AA050
		5	Dug or Drilled Well	AA050
ywq	Water Quality Attribute (value added)			
		0	Unknown [default]	AA050
		1	Potable	AA050
		2	Treatable	AA050
		3	Contaminated	AA050

TABLE E-44. Reef Line Join Table.

(This table is used to combine linear hydrographic features with their associated edge primitives in a one-to-many relationship.)

```
{Header length}L;
Reef Line Join Table;-;
id=I,1,P,Row Identifier,-,-,-,:
reefl.lft_id=I,1,N,Feature Key,-,reefl.jti,-,:
tile_id=S,1,N,Tile Reference ID,-,tile1_id.jti,-,:
edg_id=I,1,N,Edge Primitive ID,-,edg1_id.jti,-,:;
```

TABLE E-45. Reef Line Feature Table.

Thematic Layer: Hydrography
Coverage Name: hydro
Feature Table Description: Reef Line Feature Table
Table Name: reefl.lft
DQ Layer Number: 3
Portrayal Criteria: For BD120 length >= 125 meters

```
{Header length}L;
Reef Line Feature Table;-;
id=I,1,P,Row Identifier,-,-,-,:
f_code=T,5,N,FACC Feature Code,char.vdt,-,-,:
cod=S,1,N,Certainty of Delineation,int.vdt,-,-,:
mcc=S,1,N,Material Composition Category,int.vdt,-,-,:
vrr=S,1,N,Vertical Reference Category,int.vdt,-,-,:;
```

Column	Description	Value	Value Meaning	Applicable f_code for Each Attribute Value
id	Row Identifier	Sequential beginning with 1		
f_code	FACC Feature Code			
		BD120	Reef	
cod	Certainty of Delineation			
		0	Unknown	BD120
		1	Limits and Information Known	BD120
		2	Limits and Information Unknown	BD120
mcc	Material Composition Category			
		0	Unknown	BD120
		24	Coral	BD120
		84	Rock/Rocky	BD120
vrr	Vertical Reference Category			
		0	Unknown	BD120
		2	Awash at Sounding Datum	BD120
		8	Covers and Uncovers	BD120

TABLE E-46. Sea Structure Line Join Table.

(This table is used to combine linear hydrographic features with their associated edge primitives in a one-to-many relationship.)

```
{Header length}L;
Sea Structure Line Join Table;-;
id=I,1,P,Row Identifier,-,-,-,:
seastrtl.lft_id=I,1,N,Feature Key,-,seastrtl.jti,-,:
tile_id=S,1,N,Tile Reference ID,-,tile2_id.jti,-,:
edg_id=I,1,N,Edge Primitive ID,-,edg2_id.jti,-,:;
```

TABLE E-47. Sea Structure Line Feature Table.

Thematic Layer: Hydrography
Coverage Name: hydro
Feature Table Description: Sea Structure Line Feature Table
Table Name: seastrtl.lft
DQ Layer Number: 3
Portrayal Criteria: For BB140 length >= 100 meters or landmark feature, for BB230 length >= 100 meters, and for BB040 must be landmark

```
{Header length}L;
Sea Structure Line Feature Table;-;
id=I,1,P,Row Identifier,-,-,-,:
f_code=T,5,N,FACC Feature Code,char.vdt,f_code2.lti,-,:
len=S,1,N,Length/Diameter (meters),int.vdt,-,-,:
vrr=S,1,N,Vertical Reference Category,int.vdt,-,-,:
wid=S,1,N,Width (meters),int.vdt,-,-,:;
```

Column	Description	Value	Value Meaning	Applicable f_code for Each Attribute Value
id	Row Identifier	Sequential beginning with 1		
f_code	FACC Feature Code			
		BB040	Breakwater/Groyne	
		BB140	Jetty	
		BB230	Seawall	
len	Length/Diameter (meters)			
		-32768	Null	BB040,BB230
		0	Unknown	BB140
		>=100		BB140
vrr	Vertical Reference Category			
		-32768	Null	BB230
		0	Unknown	BB040,BB140
		1	Above Surface/Does not cover (At High Water)	BB040,BB140
wid	Width (meters)			
		-32768	Null	BB230
		0	Unknown	BB040,BB140
		<=20		BB040,BB140

TABLE E-48. Coast Area Join Table.

(This table is used to combine area hydrographic features with their associated face primitives in a one-to-many relationship.)

```
{Header length}L;
Coast Area Join Table;-;
id=I,1,P,Row Identifier,-,-,-,:
coasta.aft_id=I,1,N,Feature Key,-,coasta.jti,-,:
tile_id=S,1,N,Tile Reference ID,-,tile3_id.jti,-,:
fac_id=I,1,N,Face Primitive ID,-,fac3_id.jti,-,:;
```

TABLE E-49. Coast Area Feature Table.

Thematic Layer: Hydrography
Coverage Name: hydro
Feature Table Description: Coast Area Feature Table
Table Name: coasta.aft
DQ Layer Number: 3
Portrayal Criteria: For BA020 area >= 15,625 square meters and width >= 65 meters.

```
{Header length}L;
Coast Area Feature Table;-;
id=I,1,P,Row Identifier,-,-,-,:
f_code=T,5,N,FACC Feature Code,char.vdt,-,-,:
mcc=S,1,N,Material Composition Category,int.vdt,-,-,:
mcs=S,1,N,Material Composition Secondary,int.vdt,-,-,:;
```

Column	Description	Value	Value Meaning	Applicable f_code for Each Attribute Value
id	Row Identifier	Sequential beginning with 1		
f_code	FACC Feature Code			
		BA020	Foreshore	
mcc	Material Composition Category			
		0	Unknown	BA020
		8	Boulders	BA020
		16	Clay	BA020
		46	Gravel	BA020
		65	Mud	BA020
		84	Rock/Rocky	BA020
		88	Sand	BA020
		98	Shingle	BA020
		108	Stone	BA020
mcs	Material Composition Secondary			
		0	Unknown	BA020
		46	Gravel	BA020
		65	Mud	BA020
		88	Sand	BA020
		98	Shingle	BA020
		108	Stone	BA020

TABLE E-50. Danger Area Join Table.

(This table is used to combine area hydrographic features with their associated face primitives in a one-to-many relationship.)

```
{Header length}L;
Danger Area Join Table;-;
id=I,1,P,Row Identifier,-,-,-,:
dangera.aft_id=I,1,N,Feature Key,-,dangera.jti,-,:
tile_id=S,1,N,Tile Reference ID,-,tile4_id.jti,-,:
fac_id=I,1,N,Face Primitive ID,-,fac4_id.jti,-,:;
```

TABLE E-51. Danger Area Feature Table.

Thematic Layer: Hydrography
Coverage Name: hydro
Feature Table Description: Danger Area Feature Table
Table Name: dangera.aft
DQ Layer Number: 3
Portrayal Criteria: For BD100 area >= 2,500 square meters, for BD120 area >= 15,625 square meters

```
{Header length}L;
Danger Area Feature Table;-;
id=I,1,P,Row Identifier,-,-,-,:
f_code=T,5,N,FACC Feature Code,char.vdt,f_code4.ati,-,:
cod=S,1,N,Certainty of Delineation,int.vdt,-,-,:
mcc=S,1,N,Material Composition Category,int.vdt,-,-,:
vrr=S,1,N,Vertical Reference Category,int.vdt,-,-,:;
```

Column	**Description**	**Value**	**Value Meaning**	**Applicable f_code for Each Attribute Value**
id	Row Identifier	Sequential beginning with 1		
f_code	FACC Feature Code			
		BD100	Pile/Piling/Post	
		BD120	Reef	
cod	Certainty of Delineation			
		-32768	Null	BD100
		0	Unknown	BD120
		1	Limits and Information Known	BD120
mcc	Material Composition Category			
		-32768	Null	BD100
		0	Unknown	BD120
		24	Coral	BD120
		84	Rock/Rocky	BD120

TABLE E-51. Danger Area Feature Table (Continued).

vrr	Vertical Reference Category			
		0	Unknown	BD100,BD120
		1	Above Surface/Does not cover (At High Water)	BD100
		2	Awash at Sounding Datum	BD120
		8	Covers and Uncovers	BD100,BD120

TABLE E-52. Hydrography Void Collection Area Join Table.
(This table is used to combine area hydrographic features with their associated face primitives in a one-to-many relationship.)

```
{Header length}L;
Hydrography Void Collection Area Join Table;-;
id=I,1,P,Row Identifier,-,-,-,:
hydvoida.aft_id=I,1,N,Feature Key,-,hydvoida.jti,-,:
tile_id=S,1,N,Tile Reference ID,-,tile5_id.jti,-,:
fac_id=I,1,N,Face Primitive ID,-,fac5_id.jti,-,:;
```

TABLE E-53. Hydrography Void Collection Area Feature Table.

Thematic Layer: Hydrography
Coverage Name: hydro
Feature Table Description: Hydrography Void Collection Area Feature Table
Table Name: hydvoida.aft
DQ Layer Number: 3
Portrayal Criteria: For ZD020 area >= 15,625 square meters

```
{Header length}L;
Hydrography Void Collection Area Feature Table;-;
id=I,1,P,Row Identifier,-,-,-,:
f_code=T,5,N,FACC Feature Code,char.vdt,-,-,:
vca=S,1,N,Void Collection Attribute,int.vdt,-,-,:;
```

Column	**Description**	**Value**	**Value Meaning**	**Applicable f_code for Each Attribute Value**
id	Row Identifier	Sequential beginning with 1		
f_code	FACC Feature Code			
		ZD020	Void Collection Area	
vca	Void Collection Attribute			
		0	Unknown	ZD020
		2	Area Too Rough to Collect	ZD020
		3	No Available Imagery	ZD020
		6	No Available Map Source	ZD020
		7	No Suitable Imagery	ZD020

TABLE E-54. Sea Structure Area Join Table.

(This table is used to combine area hydrographic features with their associated face primitives in a one-to-many relationship.)

```
{Header length}L;
Sea Structure Area Join Table;-;
id=I,1,P,Row Identifier,-,-,-,:
seastrta.aft_id=I,1,N,Feature Key,-,seastrta.jti,-,:
tile_id=S,1,N,Tile Reference ID,-,tile6_id.jti,-,:
fac_id=I,1,N,Face Primitive ID,-,fac6_id.jti,-,:;
```

TABLE E-55. Sea Structure Area Feature Table.

Thematic Layer: Hydrography
Coverage Name: hydro
Feature Table Description: Sea Structure Area Feature Table
Table Name: seastrta.aft
DQ Layer Number: 3
Portrayal Criteria: For BB040 width > 20 meters and BB140 width > 20 meters and length >= 100 meters.

```
{Header length}L;
Sea Structure Area Feature Table;-;
id=I,1,P,Row Identifier,-,-,-,:
f_code=T,5,N,FACC Feature Code,char.vdt,f_code6.ati,-,:
len=S,1,N,Length/Diameter (meters),int.vdt,-,-,:
vrr=S,1,N,Vertical Reference Category,int.vdt,-,-,:
wid=S,1,N,Width (meters),int.vdt,-,-,:;
```

Column	Description	Value	Value Meaning	Applicable f_code for Each Attribute Value
id	Row Identifier	Sequential beginning with 1		
f_code	FACC Feature Code			
		BB040	Breakwater/Groyne	
		BB140	Jetty	
len	Length/Diameter (meters)			
		-32768	Null	BB040
		0	Unknown	BB140
		>=100		BB140
vrr	Vertical Reference Category			
		0	Unknown	BB040,BB140
		1	Above Surface/Does not cover (At High Water)	BB040,BB140
wid	Width (meters)			
		0	Unknown	BB040,BB140
		> 20		BB040,BB140

TABLE E-56. Hydrography Text Feature Table.

Thematic Layer: Hydrography
Coverage Name: hydro
Feature Table Description: Hydrography Text Feature Table
Table Name: hydrotxt.tft
DQ Layer Number: 3

```
{Header length}L;
Hydrography Text Feature Table;-;
id=I,1,P,Row Identifier,-,-,-,:
f_code=T,5,N,FACC Feature Code,char.vdt,f_code.tti,-,:
tile_id=S,1,N,Tile Reference ID,-,tile_id.tti,-,:
txt_id=I,1,N,Text Primitive ID,-,txt_id.tti,-,:;
```

Column	Description	Value	Value Meaning	Applicable f_code for Each Attribute Value
id	Row Identifier	Sequential beginning with 1		
f_code	FACC Feature Code			
		ZD040	Named Location	
		ZD045	Text Description	

TABLE E-57. Hydrography Feature Class Attribute Table.

Thematic Layer: Hydrography
Coverage Name: hydro
Table Description: Hydrography Feature Class Attribute Table
Table Name: fca
DQ Layer Number: 3

```
{Header length}L;
Hydrography Feature Class Attribute Table;-;
id=I,1,P,Row Identifier,-,-,-,:
fclass=T,8,U,Feature Class Name,-,-,-,:
type=T,1,N,Feature Type,char.vdt,-,-,:
descr=T,*,N,Description,-,-,-,:;
```

Column	Description	Value	Value Meaning	Applicable Feature Class for Each Attribute Value
id	Row Identifier	Sequential beginning with 1		
fclass	Feature Class Name			
		dangerp		
		wellp		
		reefl		
		seastrtl		
		coasta		
		dangera		
		hydvoida		
		seastrta		
		hydrotxt		
type	Feature Type			
		P	Point/Node Feature	dangerp, wellp
		L	Line Feature	reefl, seastrtl
		A	Area Feature	coasta, dangera, hydvoida, seastrta
		T	Text Feature	hydrotxt
descr	Description			
		Danger Point Features		dangerp
		Wells		wellp
		Reef Line Features		reefl
		Sea Structures		seastrtl, seastrta
		Coast Areas		coasta
		Danger Areas		dangera
		Hydrography Void Collection Areas		hydvoida
		Hydrography Coverage Text		hydrotxt

TABLE E-58. Hydrography Character Value Description Table.

Thematic Layer: Hydrography
Coverage Name: hydro
Feature Table Description: Hydrography Character Value Description Table
Table Name: char.vdt
DQ Layer Number: 3

{Header length}L;
Hydrography Character Value Description Table;-;
id=I,1,P,Row Identifier,-,-,-,:
table=T,12,N,Name of the Feature Table,-,-,-,:
attribute=T,6,N,Column Name,-,-,-,:
value=T,5,N,Unique Value of Attribute,-,-,-,:
description=T,*,N,Description of Value,-,-,-,:;

1	dangerp.pft	f_code	BD100	Pile/Piling/Post
2	dangerp.pft	f_code	BD130	Rock
3	dangerp.pft	f_code	BD180	Wreck
4	dangerp.pft	nam	UNK	No entry present
5	wellp.pft	f_code	AA050	Well
6	wellp.pft	nam	UNK	No entry present
7	reefl.lft	f_code	BD120	Reef
8	seastrtl.lft	f_code	BB040	Breakwater/Groyne
9	seastrtl.lft	f_code	BB140	Jetty
10	seastrtl.lft	f_code	BB230	Seawall
11	coasta.aft	f_code	BA020	Foreshore
12	dangera.aft	f_code	BD100	Pile/Piling/Post
13	dangera.aft	f_code	BD120	Reef
14	hydvoida.aft	f_code	ZD020	Void Collection Area
15	seastrta.aft	f_code	BB040	Breakwater/Groyne
16	seastrta.aft	f_code	BB140	Jetty
17	hydrotxt.tft	f_code	ZD040	Named Location
18	hydrotxt.tft	f_code	ZD045	Text Description
19	fca	type	A	Area Feature
20	fca	type	L	Line Feature
21	fca	type	P	Point/Node Feature
22	fca	type	T	Text Feature

E.3.5.1 Hydrography coverage glossary.

AA050 Well (P) A hole drilled into the earth or sea bed for the extraction of liquids or gasses. (See also BH170).
EXS Existence Category (P) The state or condition of the feature.
HYC Hydrological Category (P) Identifies the annual water content of the feature.
NAM Name (P) Any Identifier or code.
PRO Product Category (P) Principal material involved or product resulting from activity at site.
SCC Spring/Well Characteristic Category (P) Type of available Water.
WFT Well Feature Type (P) Hydrographic features which are symbolized as wells.
YWQ Water Quality Attribute (P) Description of the drinking quality of water.

BA020 Foreshore (A) That of the shore or beach which lies between the low water mark and the coastline/shoreline. The same condition may exist in non-contiguous off-shore areas.
MCC Material Composition Category (A) Characteristics of primary material composition of feature.
MCS Material Composition Secondary (A) Secondary material composition of feature.

BB040 Breakwater/Groyne (L,A) A structure which protects a harbor or beach from forces of the sea.
VRR Vertical Reference Category (L,A) Relative location referenced to sounding datum, unless otherwise indicated.
WID Width (meters) (L,A) A measurement of the shorter of two linear axes. For a square feature, measure either axis. For a round feature, width shall be equal to LEN.

BB140 Jetty (L,A) A man-made barrier built out into, or in the water primarily to restrain or direct currents and waves. (See also AQ030 and BB040).
LEN Length/Diameter (meters) (L,A) A measurement of the longer of two linear axes in meters. For a square feature, measure either axis. For a round feature, measure the diameter.
VRR Vertical Reference Category (L,A) Relative location referenced to sounding datum, unless otherwise indicated.
WID Width (meters) (L,A) A measurement of the shorter of two linear axes. For a square feature, measure either axis. For a round feature, width shall be equal to LEN.

BB230 Seawall (L) A structure built to protect the shore from erosion.

BD100 Pile/Piling/Post (P,A) A long heavy timber or section of steel, concrete, etc., forced in the earth to serve as a support, as for a pier.
VRR Vertical Reference Category (P,A) Relative location referenced to sounding datum, unless otherwise indicated.

BD120 Reef (L,A) A rocky or coral elevation at or near enough to the surface of the sea to be a danger to surface navigation.
COD Certainty of Delineation (L,A) Indicates knowledge of the feature's limits or information.

MCC Material Composition Category (L,A) Characteristics of primary material composition of feature.
VRR Vertical Reference Category (L,A) Relative location referenced to sounding datum, unless otherwise indicated.

BD130 Rock (P) An isolated rocky formation or a single large stone above or below the water surface.
HDI Hydrographic Depth/Height Information (P) Information about the accuracy or availability of depth or uncovering height of a feature.
LEN Length/Diameter (meters)(P) A measurement of the longer of two linear axes in meters. For a square feature, measure either axis. For a round feature, measure the diameter.
MCC Material Composition Category (P) Characteristics of primary material composition of feature.
NAM Name (P) Any Identifier or code.
VRR Vertical Reference Category (P) Relative location referenced to sounding datum, unless otherwise indicated.

BD180 Wreck (P) The ruined remains of a vessel.
LOC Location Category (P) Status of feature relative to surrounding area or water.
VRR Vertical Reference Category (P) Relative location referenced to sounding datum, unless otherwise indicated.

ZD020 Void Collection Area (A) An area lacking suitable source coverage, or where data is not required.
VCA Void Collection Attribute (A) Reason data is not collected.

ZD040 Named Location (T) A geographic place on earth, not normally appearing as a feature on a map, but having a name that is required to be placed on a map.

ZD045 Text Description (T) An area in which a characteristic or an activity pertaining to the area can be described and possibly is labeled on a product if deemed important at the time the product is being produced.

TABLE E-59. Hydrography Integer Value Description Table.

Thematic Layer: Hydrography
Coverage Name: hydro
Feature Table Description: Hydrography Integer Value Description Table
Table Name: int.vdt
DQ Layer Number: 3

{Header length}L;
Hydrography Integer Value Description Table;-;
id=I,1,P,Row Identifier,-,-,-,:
table=T,12,N,Name of the Feature Table,-,-,-,:
attribute=T,3,N,Column Name,-,-,-,:
value=S,1,N,Unique Value of Attribute,-,-,-,:
description=T,*,N,Description of Value,-,-,-,:;

1	dangerp.pft	hdi	0	Unknown
2	dangerp.pft	hdi	26	Uncovering Height Known
3	dangerp.pft	hdi	27	Uncovering Height Unknown
4	dangerp.pft	len	0	Unknown
5	dangerp.pft	loc	0	Unknown
6	dangerp.pft	loc	13	Hull Showing
7	dangerp.pft	loc	14	Masts Showing
8	dangerp.pft	loc	20	Funnel Showing
9	dangerp.pft	loc	21	Superstructure Showing
10	dangerp.pft	loc	28	Masts and Funnel Showing
11	dangerp.pft	mcc	0	Unknown
12	dangerp.pft	mcc	24	Coral
13	dangerp.pft	mcc	84	Rock/Rocky
14	dangerp.pft	vrr	0	Unknown
15	dangerp.pft	vrr	1	Above Surface/Does not cover (At High Water)
16	dangerp.pft	vrr	2	Awash at Sounding Datum
17	dangerp.pft	vrr	8	Covers and Uncovers
18	wellp.pft	exs	0	Unknown
19	wellp.pft	exs	3	Reported
20	wellp.pft	exs	6	Abandoned/Disused
21	wellp.pft	exs	28	Operational
22	wellp.pft	hyc	0	Unknown
23	wellp.pft	hyc	3	Dry
24	wellp.pft	hyc	6	Non-Perennial/Intermittent/Fluctuating
25	wellp.pft	hyc	8	Perennial/Permanent
26	wellp.pft	pro	0	Unknown
27	wellp.pft	pro	116	Water
28	wellp.pft	scc	0	Unknown
29	wellp.pft	scc	1	Alkaline
30	wellp.pft	scc	4	Mineral
31	wellp.pft	scc	9	Freshwater/Potable
32	wellp.pft	wft	0	Unknown
33	wellp.pft	wft	2	Walled-in Spring
34	wellp.pft	wft	3	Artesian Well
35	wellp.pft	wft	4	Fountain
36	wellp.pft	wft	5	Dug or Drilled Well
37	wellp.pft	ywq	0	Unknown

TABLE E-59. Hydrography Integer Value Description Table(Continued).

38	wellp.pft	ywq	1	Potable
39	wellp.pft	ywq	2	Treatable
40	wellp.pft	ywq	3	Contaminated
41	reefl.lft	cod	0	Unknown
42	reefl.lft	cod	1	Limits and Information Known
43	reefl.lft	cod	2	Limits and Information Unknown
44	reefl.lft	mcc	0	Unknown
45	reefl.lft	mcc	24	Coral
46	reefl.lft	mcc	84	Rock/Rocky
47	reefl.lft	vrr	0	Unknown
48	reefl.lft	vrr	2	Awash at Sounding Datum
49	reefl.lft	vrr	8	Covers and Uncovers
50	seastrtl.lft	len	0	Unknown
51	seastrtl.lft	vrr	0	Unknown
52	seastrtl.lft	vrr	1	Above Surface/Does not cover (At High Water)
53	seastrtl.lft	wid	0	Unknown
54	coasta.aft	mcc	0	Unknown
55	coasta.aft	mcc	8	Boulders
56	coasta.aft	mcc	16	Clay
57	coasta.aft	mcc	46	Gravel
58	coasta.aft	mcc	65	Mud
59	coasta.aft	mcc	84	Rock/Rocky
60	coasta.aft	mcc	88	Sand
61	coasta.aft	mcc	98	Shingle
62	coasta.aft	mcc	108	Stone
63	coasta.aft	mcs	0	Unknown
64	coasta.aft	mcs	46	Gravel
65	coasta.aft	mcs	65	Mud
66	coasta.aft	mcs	88	Sand
67	coasta.aft	mcs	98	Shingle
68	coasta.aft	mcs	108	Stone
69	dangera.aft	cod	0	Unknown
70	dangera.aft	cod	1	Limits and Information Known
71	dangera.aft	mcc	0	Unknown
72	dangera.aft	mcc	24	Coral
73	dangera.aft	mcc	84	Rock/Rocky
74	dangera.aft	vrr	0	Unknown
75	dangera.aft	vrr	1	Above Surface/Does not cover (At High Water)
76	dangera.aft	vrr	2	Awash at Sounding Datum
77	dangera.aft	vrr	8	Covers and Uncovers
78	hydvoida.aft	vca	0	Unknown
79	hydvoida.aft	vca	2	Area Too Rough to Collect
80	hydvoida.aft	vca	3	No Available Imagery
81	hydvoida.aft	vca	6	No Available Map Source
82	hydvoida.aft	vca	7	No Suitable Imagery
83	seastrta.aft	len	0	Unknown
84	seastrta.aft	vrr	0	Unknown
85	seastrta.aft	vrr	1	Above Surface/Does not cover (At High Water)
86	seastrta.aft	wid	0	Unknown

E.3.6 Industry coverage

TABLE E-60. Content and Format for Industry Coverage Feature Class Schema Table.

Thematic Layer: Industry
Coverage Name: ind
Feature Table Description: Industry Feature Class Schema Table
Table Name: fcs
DQ Layer Number: 4

```
{Header length}L;
Industry Feature Class Schema Table;-;
id=I,1,P,Row Identifier,-,-,-,:
feature_class=T,8,N,Name of Feature Class,-,-,-,:
table1=T,12,N,First Table,-,-,-,:
table1_key=T,16,N,Column Name in First Table,-,-,-,:
table2=T,12,N,Second Table,-,-,-,:
table2_key=T,16,N,Column Name in Second Table,-,-,-,:;
```

1	agstorep	agstorep.pft	end_id	end	id
2	agstorep	end	id	agstorep.pft	end_id
3	cisternp	cisternp.pft	end_id	end	id
4	cisternp	end	id	cisternp.pft	end_id
5	extractp	extractp.pft	end_id	end	id
6	extractp	end	id	extractp.pft	end_id
7	obstrp	obstrp.pft	end_id	end	id
8	obstrp	end	id	obstrp.pft	end_id
9	processp	processp.pft	end_id	end	id
10	processp	end	id	processp.pft	end_id
11	rigwellp	rigwellp.pft	end_id	end	id
12	rigwellp	end	id	rigwellp.pft	end_id
13	storagep	storagep.pft	end_id	end	id
14	storagep	end	id	storagep.pft	end_id
15	towerp	towerp.pft	end_id	end	id
16	towerp	end	id	towerp.pft	end_id
17	indl	indl.lft	id	indl.ljt	indl.lft_id
18	indl	indl.ljt	edg_id	edg	id
19	indl	edg	id	indl.ljt	edg_id
20	indl	indl.ljt	indl.lft_id	indl.lft	id
21	agstorea	agstorea.aft	id	agstorea.ajt	agstorea.aft_id
22	agstorea	agstorea.ajt	fac_id	fac	id
23	agstorea	fac	id	agstorea.ajt	fac_id
24	agstorea	agstorea.ajt	agstorea.aft_id	agstorea.aft	id
25	disposea	disposea.aft	id	disposea.ajt	disposea.aft_id
26	disposea	disposea.ajt	fac_id	fac	id
27	disposea	fac	id	disposea.ajt	fac_id
28	disposea	disposea.ajt	disposea.aft_id	disposea.aft	id
29	extracta	extracta.aft	id	extracta.ajt	extracta.aft_id
30	extracta	extracta.ajt	fac_id	fac	id
31	extracta	fac	id	extracta.ajt	fac_id
32	extracta	extracta.ajt	extracta.aft_id	extracta.aft	id
33	indvoida	indvoida.aft	id	indvoida.ajt	indvoida.aft_id

TABLE E-60. Content and Format for Industry Coverage Feature Class Schema Table (Continued).

34	indvoida	indvoida.ajt	fac_id	fac	id
35	indvoida	fac	id	indvoida.ajt	fac_id
36	indvoida	indvoida.ajt	indvoida.aft_id	indvoida.aft	id
37	nucleara	nucleara.aft	id	nucleara.ajt	nucleara.aft_id
38	nucleara	nucleara.ajt	fac_id	fac	id
39	nucleara	fac	id	nucleara.ajt	fac_id
40	nucleara	nucleara.ajt	nucleara.aft_id	nucleara.aft	id
41	processa	processa.aft	id	processa.ajt	processa.aft_id
42	processa	processa.ajt	fac_id	fac	id
43	processa	fac	id	processa.ajt	fac_id
44	processa	processa.ajt	processa.aft_id	processa.aft	id
45	storagea	storagea.aft	id	storagea.ajt	storagea.aft_id
46	storagea	storagea.ajt	fac_id	fac	id
47	storagea	fac	id	storagea.ajt	fac_id
48	storagea	storagea.ajt	storagea.aft_id	storagea.aft	id
49	stockyda	stockyda.aft	id	stockyda.ajt	stockyda.aft_id
50	stockyda	stockyda.ajt	fac_id	fac	id
51	stockyda	fac	id	stockyda.ajt	fac_id
52	stockyda	stockyda.ajt	stockyda.aft_id	stockyda.aft	id
53	indtxt	indtxt.tft	txt_id	txt	id
54	indtxt	txt	id	indtxt.tft	txt_id

TABLE E-61. Agricultural Storage Point Feature Table.

Thematic Layer: Industry
Coverage Name; ind
Feature Table Description: Agricultural Storage Point Feature Table
Table Name: agstorep.pft
DQ Layer Number: 4
Portrayal Criteria: For AM030 must be landmark feature and length < 40 meters and for AM020 length < 40 meters.

```
{Header length}L;
Agricultural Storage Point Feature Table;-;
id=I,1,P,Row Identifier,-,-,-,:
f_code=T,5,N,FACC Feature Code,char.vdt,f_code1.pti,-,:
exs=S,1,N,Existence Category,int.vdt,-,-,:
hgt=S,1,N,Height Above Surface Level (meters),int.vdt,-,-,:
len=S,1,N,Length/Diameter (meters),int.vdt,-,-,:
zv2=S,1,N,Highest Z-value (meters),int.vdt,-,-,:
tile_id=S,1,N,Tile Reference ID,-,tile1_id.pti,-,:
end_id=I,1,N,Entity Node Primitive ID,-,end1_id.pti,-,:;
```

Column	Description	Value	Value Meaning	Applicable f_code for Each Attribute Value
id	Row Identifier	Sequential beginning with 1		
f_code	FACC Feature Code			
		AM020	Grain Bin/Silo	
		AM030	Grain Elevator	
exs	Existence Category			
		0	Unknown	AM020,AM030
		1	Definite	AM020,AM030
		2	Doubtful	AM020,AM030
		3	Reported	AM020,AM030
hgt	Height Above Surface Level (meters)			
		0	Unknown	AM020,AM030
		1 to no upper limit		AM020,AM030
len	Length/Diameter (meters)			
		0	Unknown	AM020,AM030
		< 40		AM020,AM030
zv2	Highest Z-value (meters)			
		29999	Unknown	AM020,AM030
		-400 to 11999		AM020,AM030

TABLE E-62. Cistern Point Feature Table.

Thematic Layer:	Industry
Coverage Name;	ind
Feature Table Description:	Cistern Point Feature Table
Table Name:	cisternp.pft
DQ Layer Number:	4
Portrayal Criteria:	Must be prominent feature.

```
{Header length}L;
Cistern Point Feature Table;-;
id=I,1,P,Row Identifier,-,-,-,:
f_code=T,5,N,FACC Feature Code,char.vdt,-,-,:
tile_id=S,1,N,Tile Reference ID,-,tile2_id.pti,-,:
end_id=I,1,N,Entity Node Primitive ID,-,end2_id.pti,-,:;
```

Column	Description	Value	Value Meaning	Applicable f_code for Each Attribute Value
id	Row Identifier	Sequential beginning with 1		
f_code	FACC Feature Code			
		BI010	Cistern	

TABLE E-63. Extraction Point Feature Table.

Thematic Layer: Industry
Coverage Name; ind
Feature Table Description: Extraction Point Feature Table
Table Name: extractp.pft
DQ Layer Number: 4
Portrayal Criteria: For AA010 and AA012 must be landmark features and area < 15625 square meters.

```
{Header length}L;
Extraction Point Feature Table;-;
id=I,1,P,Row Identifier,-,-,-,:
f_code=T,5,N,FACC Feature Code,char.vdt,f_code3.pti,-,:
exs=S,1,N,Existence Category,int.vdt,-,-,:
min=S,1,N,Mining Category,int.vdt,-,-,:
nam=T,*,N,Name,char.vdt,-,-,:
pro=S,1,N,Product Category,int.vdt,-,-,:
tile_id=S,1,N,Tile Reference ID,-,tile3_id.pti,-,:
end_id=I,1,N,Entity Node Primitive ID,-,end3_id.pti,-,:;
```

Column	Description	Value	Value Meaning	Applicable f_code for Each Attribute Value
id	Row Identifier	Sequential beginning with 1		
f_code	FACC Feature Code			
		AA010	Mine	
		AA012	Quarry	
exs	Existence Category			
		0	Unknown	AA010,AA012
		6	Abandoned/Disused	AA010,AA012
		28	Operational	AA010,AA012
min	Mining Category			
		-32768	Null	AA012
		0	Unknown	AA010
		2	Horizontal Shaft	AA010
		3	Open Pit	AA010
		4	Placer	AA010
		5	Prospect	AA010
		6	Strip	AA010
		7	Vertical Shaft	AA010
		8	Peat Cuttings	AA010
nam	Name			
	variable length text			
		= zero-length	Null	AA012
		Character text string		AA010
		UNK (No entry present)		AA010

TABLE E-63. Extraction Point Feature Table (Continued).

pro	Product Category			
		0	Unknown	AA010,AA012
		16	Clay	AA010
		17	Coal	AA010
		23	Copper	AA010
		42	Gold	AA010
		46	Gravel	AA012
		51	Iron	AA010
		54	Lead	AA010
		84	Rock/Rocky	AA012
		87	Salt	AA010
		88	Sand	AA012
		100	Silver	AA010
		112	Uranium	AA010
		118	Zinc	AA010
		119	Bauxite	AA010
		999	Other	AA010

TABLE E-64. Obstruction Point Feature Table.

Thematic Layer: Industry
Coverage Name: ind
Feature Table Description: Obstruction Point Feature Table
Table Name: obstrp.pft
DQ Layer Number: 4
Portrayal Criteria: For AF010, AF030, AF040, and AJ050 if height <= 46 meters, then must be landmark feature.

```
{Header length}L;
Obstruction Point Feature Table;-;
id=I,1,P,Row Identifier,-,-,-,:
f_code=T,5,N,FACC Feature Code,char.vdt,f_code4.pti,-,:
exs=S,1,N,Existence Category,int.vdt,-,-,:
hgt=S,1,N,Height Above Surface Level (meters),int.vdt,-,-,:
loc=S,1,N,Location Category,int.vdt,-,-,:
zv2=S,1,N,Highest Z-value (meters),int.vdt,-,-,:
tile_id=S,1,N,Tile Reference ID,-,tile4_id.pti,-,:
end_id=I,1,N,Entity Node Primitive ID,-,end4_id.pti,-,:;
```

Column	Description	Value	Value Meaning	Applicable f_code for Each Attribute Value
id	Row Identifier	Sequential beginning with 1		
f_code	FACC Feature Code			
		AF010	Chimney/Smokestack	
		AF030	Cooling Tower	
		AF040	Crane	
		AF070	Flare Pipe	
		AJ050	Windmill	
exs	Existence Category			
		0	Unknown	AF010,AF030,AF040, AF070,AJ050
		1	Definite	AF010,AF030,AF040, AF070,AJ050
		2	Doubtful	AF010,AF030,AF040, AF070,AJ050
		3	Reported	AF010,AF030,AF040, AF070,AJ050
hgt	Height Above Surface Level (meters)			
		0	Unknown	AF010,AF030, AF040,AF070, AJ050
		1 to no upper limit		AF010,AF030, AF040,AJ050
		>=46		AF070

TABLE E-64. Obstruction Point Feature Table (Continued).

loc	Location Category			
		-32768	Null	AF010,AF030, AF040,AJ050
		0	Unknown	AF070
		8	On Ground Surface	AF070
		22	Offshore	AF070
zv2	Highest Z-value (meters)			
		29999	Unknown	AF010,AF030, AF040,AF070, AJ050
		-400 to 11999		AF010,AF030, AF040,AF070, AJ050

TABLE E-65. Processing Point Feature Table.

Thematic Layer: Industry
Coverage Name; ind
Feature Table Description: Processing Point Feature Table
Table Name: processp.pft
DQ Layer Number: 4
Portrayal Criteria: For AC000 must be area < 15625 square meters.

```
{Header length}L;
Processing Point Feature Table;-;
id=I,1,P,Row Identifier,-,-,-,:
f_code=T,5,N,FACC Feature Code,char.vdt,-,-,:
nam=T,*,N,Name,char.vdt,-,-,:
pro=S,1,N,Product Category,int.vdt,-,-,:
exs=S,1,N,Existence Category,int.vdt,-,-,:
yht=S,1,N,Height Range with Greater Precision,int.vdt,-,-,:
tile_id=S,1,N,Tile Reference ID,-,tile5_id.pti,-,:
end_id=I,1,N,Entity Node Primitive ID,-,end5_id.pti,-,:;
```

Column	Description	Value	Value Meaning	Applicable f_code for Each Attribute Value
id	Row Identifier	Sequential beginning with 1		
f_code	FACC Feature Code			
		AC000	Processing Plant/Treatment Plant	
nam	Name	Character text string		AC000
		UNK (No entry present)		AC000
pro	Product Category			
		0	Unknown	AC000
		2	Aluminum	AC000
		5	Asphalt	AC000
		9	Brick	AC000
		11	Cement	AC000
		13	Chemical	AC000
		19	Coke	AC000
		23	Copper	AC000
		33	Explosives	AC000
		39	Gasoline	AC000
		40	Glass	AC000
		42	Gold	AC000
		50	Heat	AC000
		51	Iron	AC000
		54	Lead	AC000
		56	Lumber	AC000
		64	Metal	AC000
		67	Oil	AC000
		71	Paper	AC000
		82	Radioactive Material	AC000
		85	Rubber	AC000

TABLE E-65. Processing Point Feature Table (Continued).

	95	Sewage	AC000
	100	Silver	AC000
	107	Steel	AC000
	112	Uranium	AC000
	113	Vegetation Products	AC000
	116	Water	AC000
	118	Zinc	AC000
	999	Other	AC000
exs	Existence Category (value added)		
	0	Unknown [default]	AC000
	5	Under Construction	AC000
	6	Abandoned/Disused	AC000
	7	Destroyed	AC000
	28	Operational	AC000
	601	Damaged	AC000
yht	Height Range with Greater Precision (value added)		
	0	Unknown	AC000
	1	<= 0.5 [default]	AC000
	2	> 0.5 and <= 1.0	AC000
	3	> 1.0 and <= 1.5	AC000
	4	> 1.5 and <= 2.0	AC000
	5	> 2.0 and <= 5.0	AC000
	6	> 5.0 and <= 10.0	AC000
	7	> 10.0 and <= 20.0	AC000
	8	> 20.0 and <= 35.0	AC000
	9	> 35.0	AC000

TABLE E-66. Rig Well Point Feature Table.

Thematic Layer: Industry
Coverage Name; ind
Feature Table Description: Rig Well Point Feature Table
Table Name: rigwellp.pft
DQ Layer Number: 4
Portrayal Criteria: For AC020 must be landmark feature and non-water wells must be prominent.

```
{Header length}L;
Rig Well Point Feature Table;-;
id=I,1,P,Row Identifier,-,-,-,:
f_code=T,5,N,FACC Feature Code,char.vdt,f_code6.pti,-,:
exs=S,1,N,Existence Category,int.vdt,-,-,:
hgt=S,1,N,Height Above Surface Level (meters),int.vdt,-,-,:
loc=S,1,N,Location Category,int.vdt,-,-,:
nam=T,*,N,Name,char.vdt,-,-,:
pro=S,1,N,Product Category,int.vdt,-,-,:
zv2=S,1,N,Highest Z-value (meters),int.vdt,-,-,:
yht=S,1,N,Height Range with Greater Precision,int.vdt,-,-,:
tile_id=S,1,N,Tile Reference ID,-,tile6_id.pti,-,:
end_id=I,1,N,Entity Node Primitive ID,-,end6_id.pti,-,:;
```

Column	Description	Value	Value Meaning	Applicable f_code for Each Attribute Value
id	Row Identifier	Sequential beginning with 1		
f_code	FACC Feature Code			
		AA040	Rig/Superstructure	
		AA050	Well	
		AC020	Catalytic Cracker	
exs	Existence Category (some value added)			
		-32768	Null	AC020
		0	Unknown	AA040,AA050
		1	Definite	AA040
		2	Doubtful	AA040
		3	Reported	AA040,AA050
		6	Abandoned/Disused	AA050
		28	Operational	AA050
		5 (v/a)	Under Construction	AA050
		7 (v/a)	Destroyed	AA050
		601 (v/a)	Damaged	AA050
hgt	Height Above Surface Level (meters)			
		-32768	Null	AA050,AC020
		0	Unknown	AA040
		>=46		AA040

TABLE E-66. Rig Well Point Feature Table (Continued).

loc	Location Category			
		-32768	Null	AA050,AC020
		0	Unknown	AA040
		22	Offshore	AA040
		999	Other	AA040
nam	Name			
	Variable length			
	text =	zero-length	Null	AA040,AC020
		Character text string		AA050
		UNK (No entry present)		AA050
pro	Product Category			
		-32768	Null	AC020
		0	Unknown	AA040,AA050
		38	Gas	AA040,AA050
		67	Oil	AA040,AA050
zv2	Highest Z-value (meters)			
		-32768	Null	AA050,AC020
		29999	Unknown	AA040
		-400 to 11999		AA040
yht	Height Range with Greater Precision (value added)			
		-32768	Null	AA040,AA050
		0	Unknown [default]	AC020
		1	<= 0.5	AC020
		2	> 0.5 and <= 1.0	AC020
		3	> 1.0 and <= 1.5	AC020
		4	> 1.5 and <= 2.0	AC020
		5	> 2.0 and <= 5.0	AC020
		6	> 5.0 and <= 10.0	AC020
		7	> 10.0 and <= 20.0	AC020
		8	> 20.0 and <= 35.0	AC020
		9	> 35.0	AC020

TABLE E-67. Storage Point Feature Table.

Thematic Layer: Industry
Coverage Name; ind
Feature Table Description: Storage Point Feature Table
Table Name: storagep.pft
DQ Layer Number: 4
Portrayal Criteria: For AM080 must be prominent feature, and for AM060 length < 40 meters, and for AM070 if located on the ground height >= 46 meters or length <= 40 meters.

```
{Header length}L;
Storage Point Feature Table;-;
id=I,1,P,Row Identifier,-,-,-,:
f_code=T,5,N,FACC Feature Code,char.vdt,f_code7.pti,-,:
exs=S,1,N,Existence Category,int.vdt,-,-,:
hgt=S,1,N,Height Above Surface Level (meters),int.vdt,-,-,:
len=S,1,N,Length/Diameter (meters),int.vdt,-,-,:
loc=S,1,N,Location Category,int.vdt,-,-,:
pro=S,1,N,Product Category,int.vdt,-,-,:
zv2=S,1,N,Highest Z-value (meters),int.vdt,-,-,:
tile_id=S,1,N,Tile Reference ID,-,tile7_id.pti,-,:
end_id=I,1,N,Entity Node Primitive ID,-,end7_id.pti,-,:;
```

Column	Description	Value	Value Meaning	Applicable f_code for Each Attribute Value
id	Row Identifier	Sequential beginning with 1		
f_code	FACC Feature Code			
		AM060	Storage Bunker/Storage Mound	
		AM070	Tank	
		AM080	Water Tower	
exs	Existence Category (some value added)			
		-32768	Null	AM060
		0	Unknown	AM070,AM080
		1	Definite	AM070,AM080
		2	Doubtful	AM070,AM080
		3	Reported	AM070,AM080
		5 (v/a)	Under Construction	AM070,AM080
		6 (v/a)	Abandoned/Disused	AM070,AM080
		7 (v/a)	Destroyed	AM070,AM080
		28 (v/a)	Operational	AM070,AM080
		601 (v/a)	Damaged	AM070,AM080
hgt	Height Above Surface Level (meters)			
		-32768	Null	AM060
		0	Unknown	AM070,AM080
		>0		AM070,AM080

TABLE E-67. Storage Point Feature Table (Continued).

len	Length/Diameter (meters)			
		-32768	Null	AM080
		0	Unknown	AM060,AM070
		< 40		AM060
		<=40		AM070
loc	Location Category			
		-32768	Null	AM060,AM080
		0	Unknown	AM070
		4	Below Surface /Submerged /Underground	AM070
		8	On Ground Surface	AM070
pro	Product Category			
		-32768	Null	AM080
		0	Unknown	AM060,AM070
		1	Aircraft	AM060
		3	Ammunition	AM060
		13	Chemical	AM070
		33	Explosives	AM060
		38	Gas	AM070
		39	Gasoline	AM060,AM070
		67	Oil	AM070
		82	Radioactive Material	AM060
		112	Uranium	AM060
		116	Water	AM070
		131	Personnel	AM060
		999	Other	AM070
zv2	Highest Z-value (meters)			
		-32768	Null	AM060
		29999	Unknown	AM070,AM080
		-400 to 11999		AM070,AM080

TABLE E-68. Tower Point Feature Table.

Thematic Layer: Industry
Coverage Name: ind
Feature Table Description: Tower Point Feature Table
Table Name: towerp.pft
DQ Layer Number: 4
Portrayal Criteria: For AL240 must be prominent feature.

```
Header length}L;
Tower Point Feature Table;-;
id=I,1,P,Row Identifier,-,-,-,:
f_code=T,5,N,FACC Feature Code,char.vdt,-,-,:
exs=S,1,N,Existence Category,int.vdt,-,-,:
hgt=S,1,N,Height Above Surface Level (meters),int.vdt,-,-,:
ttc=S,1,N,Tower Type Category,int.vdt,-,-,:
zv2=S,1,N,Highest Z-value (meters),int.vdt,-,-,:
tile_id=S,1,N,Tile Reference ID,-,tile8_id.pti,-,:
end_id=I,1,N,Entity Node Primitive ID,-,end8_id.pti,-,:;
```

Column	Description	Value	Value Meaning	Applicable f_code for Each Attribute Value
id	Row Identifier	Sequential beginning with 1		
f_code	FACC Feature Code			
		AL240	Tower (Non-communication)	
exs	Existence Category			
		0	Unknown	AL240
		1	Definite	AL240
		2	Doubtful	AL240
		3	Reported	AL240
hgt	Height Above Surface Level (meters)			
		0	Unknown	AL240
		1 to no upper limit		AL240
ttc	Tower Type Category			
		0	Unknown	AL240
		2	Observation/Lookout	AL240
		3	Other	AL240
zv2	Highest Z-value (meters)			
		29999	Unknown	AL240
		-400 to 11999		AL240

TABLE E-69. Industry Line Join Table.

(This table is used to combine linear industrial features with their associated edge primitives in a one-to-many relationship.)

```
{Header length}L;
Industry Line Join Table;-;
id=I,1,P,Row Identifier,-,-,-,:
indl.lft_id=I,1,N,Feature Key,-,indl.jti,-,:
tile_id=S,1,N,Tile Reference ID,-,tile1_id.jti,-,:
edg_id=I,1,N,Edge Primitive ID,-,edg1_id.jti,-,:;
```

TABLE E-70. Industry Line Feature Table.

Thematic Layer: Industry
Coverage Name: ind
Feature Table Description: Industry Line Feature Table
Table Name: indl.lft
DQ Layer Number: 4
Portrayal Criteria:

For AF020 length >= 375 meters, for BH060 length >= 75 meters, and for FA090 length >= 625 meters

```
{Header length}L;
Industry Line Feature Table;-;
id=I,1,P,Row Identifier,-,-,-,:
f_code=T,5,N,FACC Feature Code,char.vdt,f_code1.lti,-,:
loc=S,1,N,Location Category,int.vdt,-,-,:;
```

Column	**Description**	**Value**	**Value Meaning**	**Applicable f_code for Each Attribute Value**
id	Row Identifier	Sequential beginning with 1		
f_code	FACC Feature Code			
		AF020	Conveyor	
		BH060	Flume	
		FA090	Geophysical Prospecting Grid	
loc	Location Category			
		-32768	Null	AF020,FA090
		0	Unknown	BH060
		8	On Ground Surface	BH060
		25	Suspended/Elevated above Ground or Water Surface	BH060

TABLE E-71. Agricultural Storage Area Join Table.
(This table is used to combine area industrial features with their associated face primitives in a one-to-many relationship.)

```
{Header length}L;
Agricultural Storage Area Join Table;-;
id=I,1,P,Row Identifier,-,-,-,:
agstorea.aft_id=I,1,N,Feature Key,-,agstorea.jti,-,:
tile_id=S,1,N,Tile Reference ID,-,tile2_id.jti,-,:
fac_id=I,1,N,Face Primitive ID,-,fac2_id.jti,-,:;
```

TABLE E-72. Agricultural Storage Area Feature Table.

Thematic Layer: Industry
Coverage Name: ind
Feature Table Description: Agricultural Storage Area Feature Table
Table Name: agstorea.aft
DQ Layer Number: 4
Portrayal Criteria: For AM020 and AM030 length >=40 meters

```
{Header length}L;
Agricultural Storage Area Feature Table;-;
id=I,1,P,Row Identifier,-,-,-,:
f_code=T,5,N,FACC Feature Code,char.vdt,f_code2.ati,-,:
hgt=S,1,N,Height Above Surface Level (meters),int.vdt,-,-,:
len=S,1,N,Length/Diameter (meters),int.vdt,-,-,:;
```

Column	Description	Value	Value Meaning	Applicable f_code for Each Attribute Value
id	Row Identifier	Sequential beginning with 1		
f_code	FACC Feature Code			
		AM020	Grain Bin/Silo	
		AM030	Grain Elevator	
hgt	Height Above Surface Level (meters)			
		-32768	Null	AM020
		0	Unknown	AM030
		> 0		AM030
len	Length/Diameter (meters)			
		0	Unknown	AM020,AM030
		>= 40		AM020,AM030

TABLE E-73. Disposal Area Join Table.

(This table is used to combine area industrial features with their associated face primitives in a one-to-many relationship.)

```
{Header length}L;
Disposal Area Join Table;-;
id=I,1,P,Row Identifier,-,-,-,:
disposea.aft_id=I,1,N,Feature Key,-,disposea.jti,-,:
tile_id=S,1,N,Tile Reference ID,-,tile3_id.jti,-,:
fac_id=I,1,N,Face Primitive ID,-,fac3_id.jti,-,:;
```

TABLE E-74. Disposal Area Feature Table.

Thematic Layer: Industry
Coverage Name: ind
Feature Table Description: Disposal Area Feature Table
Table Name: disposea.aft
DQ Layer Number: 4
Portrayal Criteria: For AB000 and AB010 area >= 15,625 square meters and landmark feature

```
{Header length}L;
Disposal Area Feature Table;-;
id=I,1,P,Row Identifier,-,-,-,:
f_code=T,5,N,FACC Feature Code,char.vdt,f_code3.ati,-,:
pro=S,1,N,Product Category,int.vdt,-,-,:;
```

Column	Description	Value	Value Meaning	Applicable f_code for Each Attribute Value
id	Row Identifier	Sequential beginning with 1		
f_code	FACC Feature Code			
		AB000	Disposal Site/Waste Pile	
		AB010	Wrecking Yard/Scrap Yard	
pro	Product Category			
		-32768	Null	AB010
		0	Unknown	AB000
		101	Slag	AB000
		127	Tailings	AB000
		128	Refuse	AB000

TABLE E-75. Extraction Area Join Table.

(This table is used to combine area industrial features with their associated face primitives in a one-to-many relationship.)

```
{Header length}L;
Extraction Area Join Table;-;
id=I,1,P,Row Identifier,-,-,-,:
extracta.aft_id=I,1,N,Feature Key,-,extracta.jti,-,:
tile_id=S,1,N,Tile Reference ID,-,tile4_id.jti,-,:
fac_id=I,1,N,Face Primitive ID,-,fac4_id.jti,-,:;
```

TABLE E-76. Extraction Area Feature Table.

Thematic Layer: Industry
Coverage Name: ind
Feature Table Description: Extraction Area Feature Table
Table Name: extracta.aft
DQ Layer Number: 4
Portrayal Criteria: For AA010 and AA012 area >= 15,625 square meters and/or landmark as abandoned area.

```
{Header length}L;
Extraction Area Feature Table;-;
id=I,1,P,Row Identifier,-,-,-,:
f_code=T,5,N,FACC Feature Code,char.vdt,f_code4.ati,-,:
exs=S,1,N,Existence Category,int.vdt,-,-,:
min=S,1,N,Mining Category,int.vdt,-,-,:
nam=T,*,N,Name,char.vdt,-,-,:
pro=S,1,N,Product Category,int.vdt,-,-,:;
```

Column	Description	Value	Value Meaning	Applicable f_code for Each Attribute Value
id	Row Identifier	Sequential beginning with 1		
f_code	FACC Feature Code			
		AA010	Mine	
		AA012	Quarry	
exs	Existence Category			
		0	Unknown	AA010,AA012
		6	Abandoned/Disused	AA010,AA012
		28	Operational	AA010,AA012

TABLE E-76. Extraction Area Feature Table (Continued).

min	Mining Category			
		-32768	Null	AA012
		0	Unknown	AA010
		2	Horizontal Shaft	AA010
		3	Open Pit	AA010
		4	Placer	AA010
		5	Prospect	AA010
		6	Strip	AA010
		7	Vertical Shaft	AA010
		8	Peat Cuttings	AA010
nam	Name			
	variable length text			
	= zero-length		Null	AA012
		Character text string		AA010
		UNK (No entry present)		AA010
pro	Product Category			
		0	Unknown	AA010,AA012
		16	Clay	AA010
		17	Coal	AA010
		23	Copper	AA010
		42	Gold	AA010
		46	Gravel	AA012
		51	Iron	AA010
		54	Lead	AA010
		84	Rock/Rocky	AA012
		87	Salt	AA010
		88	Sand	AA012
		100	Silver	AA010
		112	Uranium	AA010
		118	Zinc	AA010
		119	Bauxite	AA010
		999	Other	AA010

TABLE E-77. Industrial Void Collection Area Join Table.
(This table is used to combine area industrial features with their associated face primitives in a one-to-many relationship.)

```
{Header length}L;
Industrial Void Collection Area Join Table;-;
id=I,1,P,Row Identifier,-,-,-,:
indvoida.aft_id=I,1,N,Feature Key,-,indvoida.jti,-,:
tile_id=S,1,N,Tile Reference ID,-,tile5_id.jti,-,:
fac_id=I,1,N,Face Primitive ID,-,fac5_id.jti,-,:;
```

TABLE E-78. Industry Void Area Feature Table.

Thematic Layer: Industry
Coverage Name: ind
Feature Table Description: Industry Void Collection Area Feature Table
Table Name: indvoida.aft
DQ Layer Number: 4
POrtrayal Criteria: For ZD020 area >= 15,625 square meters

```
{Header length}L;
Industry Void Collection Area Feature Table;-;
id=I,1,P,Row Identifier,-,-,-,:
f_code=T,5,N,FACC Feature Code,char.vdt,-,-,:
vca=S,1,N,Void Collection Attribute,int.vdt,-,-,:;
```

Column	Description	Value	Value Meaning	Applicable f_code for Each Attribute Value
id	Row Identifier	Sequential beginning with 1		
f_code	FACC Feature Code			
		ZD020	Void Collection Area	
vca	Void Collection Attribute			
		0	Unknown	ZD020
		2	Area Too Rough to Collect	ZD020
		3	No Available Imagery	ZD020
		6	No Available Map Source	ZD020
		7	No Suitable Imagery	ZD020

TABLE E-79. Nuclear Accelerator Area Join Table.

(This table is used to combine area industrial features with their associated face primitives in a one-to-many relationship.)

```
{Header length}L;
Nuclear Accelerator Area Join Table;-;
id=I,1,P,Row Identifier,-,-,-,:
nucleara.aft_id=I,1,N,Feature Key,-,nucleara.jti,-,:
tile_id=S,1,N,Tile Reference ID,-,tile6_id.jti,-,:
fac_id=I,1,N,Face Primitive ID,-,fac6_id.jti,-,:;
```

TABLE E-80. Nuclear Accelarator Area Feature Table.

Thematic Layer: Industry
Coverage Name: ind
Feature Table Description: Nuclear Accelerator Area Feature Table
Table Name: nucleara.aft
DQ Layer Number: 4
Portrayal Criteria: For AL140 length >= 40 meters

```
{Header length}L;
Nuclear Acclerator Area Feature Table;-;
id=I,1,P,Row Identifier,-,-,-,:
f_code=T,5,N,FACC Feature Code,char.vdt,-,-,:
len=S,1,N,Length/Diameter (meters),int.vdt,-,-,:;
```

Column	Description	Value	Value Meaning	Applicable f_code for Each Attribute Value
id	Row Identifier	Sequential beginning with 1		
f_code	FACC Feature Code			
		AL140	Particle Accelerator	
len	Length/Diameter (meters)			
		0	Unknown	AL140
		>= 40		AL140

TABLE E-81. Processing Area Join Table.

(This table is used to combine area industrial features with their associated face primitives in a one-to-many relationship.)

```
{Header length}L;
Processing Area Join Table;-;
id=I,1,P,Row Identifier,-,-,-,:
processa.aft_id=I,1,N,Feature Key,-,processa.jti,-,:
tile_id=S,1,N,Tile Reference ID,-,tile7_id.jti,-,:
fac_id=I,1,N,Face Primitive ID,-,fac7_id.jti,-,:;
```

TABLE E-82. Processing Area Feature Table.

Thematic Layer: Industry
Coverage Name: ind
Feature Table Description: Processing Area Feature Table
Table Name: processa.aft
DQ Layer Number: 4
Portrayal Criteria: For AC000 area >= 15,625 square meters.

```
{Header length}L;
Processing Area Feature Table;-;
id=I,1,P,Row Identifier,-,-,-,:
f_code=T,5,N,FACC Feature Code,char.vdt,-,-,:
nam=T,*,N,Name,char.vdt,-,-,:
pro=S,1,N,Product Category,int.vdt,-,-,:
exs=S,1,N,Existence Category,int.vdt,-,-,:
yht=S,1,N,Height Range with Greater Precision,int.vdt,-,-,:;
```

Column	**Description**	**Value**	**Value Meaning**	**Applicable f_code for Each Attribute Value**
id	Row Identifier	Sequential beginning with 1		
f_code	FACC Feature Code			
		AC000	Processing Plant/ Treatment Plant	
nam	Name			
		Character text string		AC000
		UNK (No entry present)		AC000
pro	Product Category			
		0	Unknown	AC000
		2	Aluminum	AC000
		5	Asphalt	AC000
		9	Brick	AC000
		11	Cement	AC000
		13	Chemical	AC000
		23	Copper	AC000
		33	Explosives	AC000
		39	Gasoline	AC000
		40	Glass	AC000

TABLE E-82. Processing Area Feature Table (Continued).

	42	Gold	AC000
	50	Heat	AC000
	51	Iron	AC000
	54	Lead	AC000
	56	Lumber	AC000
	64	Metal	AC000
	67	Oil	AC000
	71	Paper	AC000
	82	Radioactive Material	AC000
	85	Rubber	AC000
	95	Sewage	AC000
	100	Silver	AC000
	107	Steel	AC000
	112	Uranium	AC000
	113	Vegetation Products	AC000
	116	Water	AC000
	118	Zinc	AC000
	999	Other	AC000
exs	Existence Category (value added)		
	0	Unknown [default]	AC000
	5	Under Construction	AC000
	6	Abandoned/Disused	AC000
	7	Destroyed	AC000
	28	Operational	AC000
	601	Damaged	AC000
yht	Height Range with Greater Precision (value added)		
	0	Unknown [default]	AC000
	1	<= 0.5	AC000
	2	> 0.5 and <= 1.0	AC000
	3	> 1.0 and <= 1.5	AC000
	4	> 1.5 and <= 2.0	AC000
	5	> 2.0 and <= 5.0	AC000
	6	> 5.0 and <= 10.0	AC000
	7	> 10.0 and <= 20.0	AC000
	8	> 20.0 and <= 35.0	AC000
	9	> 35.0	AC000

TABLE E-83. Storage Area Join Table.

(This table is used to combine area industrial features with their associated face primitives in a one-to-many relationship.)

```
{Header length}L;
Storage Area Join Table;-;
id=I,1,P,Row Identifier,-,-,-,:
storagea.aft_id=I,1,N,Feature Key,-,storagea.jti,-,:
tile_id=S,1,N,Tile Reference ID,-,tile8_id.jti,-,:
fac_id=I,1,N,Face Primitive ID,-,fac8_id.jti,-,:;
```

TABLE E-84. Storage Area Feature Table.

Thematic Layer: Industry
Coverage Name: ind
Feature Table Description: Storage Area Feature Table
Table Name: storagea.aft
DQ Layer Number: 4
Portrayal Criteria: For AM010 width >= 125 meters or landmark feature, for AM060 length >= 40 meters, and AM070 length > 40 meters.

```
{Header length}L;
Storage Area Feature Table;-;
id=I,1,P,Row Identifier,-,-,-,:
f_code=T,5,N,FACC Feature Code,char.vdt,f_code8.ati,-,:
exs=S,1,N,Existence Category,int.vdt,-,-,:
hgt=S,1,N,Height Above Surface Level (meters),int.vdt,-,-,:
len=S,1,N,Length/Diameter (meters),int.vdt,-,-,:
loc=S,1,N,Location Category,int.vdt,-,-,:
pro=S,1,N,Product Category,int.vdt,-,-,:
wid=S,1,N,Width (meters),int.vdt,-,-,:;
```

Column	Description	Value		Value Meaning	Applicable f_code for Each Attribute Value
id	Row Identifier	Sequential beginning with 1			
f_code	FACC Feature Code				
		AM010		Depot (Storage)	
		AM060		Storage Bunker/Storage Mound	
		AM070		Tank	
exs	Existence Category (value added)				
		-32768		Null	AM010,AM060
		0	(v/a)	Unknown [default]	AM070
		5	(v/a)	Under Construction	AM070
		6	(v/a)	Abandoned/Disused	AM070
		7	(v/a)	Destroyed	AM070
		28	(v/a)	Operational	AM070
		601	(v/a)	Damaged	AM070

TABLE E-84. Storage Area Feature Table (Continued).

hgt	Height Above Surface Level (meters)			
		-32768	Null	AM010,AM060
		0	Unknown	AM070
		> 0		AM070
len	Length/Diameter (meters)			
		-32768	Null	AM010
		0	Unknown	AM060,AM070
		> 40		AM070
		>=40		AM060
loc	Location Category			
		-32768	Null	AM060
		0	Unknown	AM010,AM070
		4	Below Surface/ Submerged/Underground	AM010,AM070
		8	On Ground Surface	AM010,AM070
pro	Product Category			
		-32768	Null	AM010
		0	Unknown	AM060,AM070
		1	Aircraft	AM060
		3	Ammunition	AM060
		13	Chemical	AM070
		33	Explosives	AM060
		38	Gas	AM070
		39	Gasoline	AM060,AM070
		67	Oil	AM070
		82	Radioactive Material	AM060
		112	Uranium	AM060
		116	Water	AM070
		131	Personnel	AM060
		999	Other	AM070
wid	Width (meters)			
		-32768	Null	AM060,AM070
		0	Unknown	AM010
		>=125		AM010

TABLE E-85. Stockyard Area Join Table.

(This table is used to combine area industrial features with their associated face primitives in a one-to-many relationship.)

```
{Header length}L;
Stockyard Area Join Table;-;
id=I,1,P,Row Identifier,-,-,-,:
stockyda.aft_id=I,1,N,Feature Key,-,stockyda.jti,-,:
tile_id=S,1,N,Tile Reference ID,-,tile9_id.jti,-,:
fac_id=I,1,N,Face Primitive ID,-,fac9_id.jti,-,:;
```

TABLE E-86. Stockyard Area Feature Table.

Thematic Layer:	Industry
Coverage Name:	ind
Feature Table Description:	Stockyard Area Feature Table
Table Name:	stockyda.aft
DQ Layer Number:	4
Portrayal Criteria:	For AJ030 area >= 15,625 square meters and landmark.

```
{Header length}L;
Stockyard Area Feature Table;-;
id=I,1,P,Row Identifier,-,-,-,:
f_code=T,5,N,FACC Feature Code,char.vdt,-,-,:;
```

Column	Description	Value	Value Meaning	Applicable f_code for Each Attribute Value
id	Row Identifier	Sequential beginning with 1		
f_code	FACC Feature Code			
		AJ030	Feed Lot/Stockyard/Holding Pen	

TABLE E-87. Industry Text Feature Table.

Thematic Layer: Industry
Coverage Name: ind
Feature Table Description: Industry Text Feature Table
Table Name: indtxt.tft
DQ Layer Number: 4

```
{Header length}L;
Industry Text Feature Table;-;
id=I,1,P,Row Identifier,-,-,-,:
f_code=T,5,N,FACC Feature Code,char.vdt,f_code.tti,-,:
tile_id=S,1,N,Tile Reference ID,-,tile_id.tti,-,:
txt_id=I,1,N,Text Primitive ID,-,txt_id.tti,-,:;
```

Column	Description	Value	Value Meaning	Applicable f_code for Each Attribute Value
id	Row Identifier	Sequential beginning with 1		
f_code	FACC Feature Code			
		ZD040	Named Location	
		ZD045	Text Description	

TABLE E-88. Industry Feature Class Attribute Table.

Thematic Layer: Industry
Coverage Name: ind
Table Description: Industry Feature Class Attribute Table
Table Name: fca
DQ Layer Number: 4

```
{Header length}L;
Industry Feature Class Attribute Table;-;
id=I,1,P,Row Identifier,-,-,-,:
fclass=T,8,U,Feature Class Name,-,-,-,:
type=T,1,N,Feature Type,char.vdt,-,-,:
descr=T,*,N,Description,-,-,-,:;
```

Column	Description	Value	Value Meaning	Applicable Feature Class for Each Attribute Value
id	Row Identifier	Sequential beginning with 1		
fclass	Feature Class Name			
		agstorep		
		cisternp		
		extractp		
		obstrp		
		processp		
		rigwellp		
		storagep		
		towerp		
		indl		
		agstorea		
		disposea		
		extracta		
		indvoida		
		nucleara		
		processa		
		storagea		
		stockyda		
		indtxt		
type	Feature Type			
		P	Point/Node Feature	agstorep, cisternp, extractp, obstrp, processp, rigwellp, storagep, towerp
		L	Line Feature	indl
		A	Area Feature	agstorea, disposea, extracta, indvoida, nucleara, processa, storagea, stockyda
		T	Text Feature	indtxt

TABLE E-88. Industry Feature Class Attribute Table (Continued).

descr	Description		
		Agricultural Storage Sites	agstorep, agstorea
		Cistern	cisternp
		Mines/Quarries	extractp
		Obstructions	obstrp
		Processing/Treatment Sites	processp
		Rigs and Wells	rigwellp
		Tanks and Water Towers	storagep, storagea
		Non-Communication Towers	towerp
		Industry Linear Features	indl
		Disposal Sites	disposea
		Extraction Areas	extracta
		Industry Void Collection Areas	indvoida
		Nuclear Accelerator	nucleara
		Processing/Treatment Plants	processa
		Stockyard Area	stockyda
		Industry Coverage Text	indtxt

TABLE E-89. Industry Character Value Description Table.

Thematic Layer: Industry
Coverage Name: ind
Feature Table Description: Industry Character Value Description Table
Table Name: char.vdt
DQ Layer Number: 4

{Header length}L;
Industry Character Value Description Table;-;
id=I,1,P,Row Identifier,-,-,-,:
table=T,12,N,Name of the Feature Table,-,-,-,:
attrbute=T,6,N,Column Name,-,-,-,:
value=T,5,N,Unique Value of Attribute,-,-,-,:
description=T,*,N,Description of Value,-,-,-,:;

1	agstorep.pft	f_code	AM020	Grain Bin/Silo
2	agstorep.pft	f_code	AM030	Grain Elevator
3	cisternp.pft	f_code	BI010	Cistern
4	extractp.pft	f_code	AA010	Mine
5	extractp.pft	f_code	AA012	Quarry
6	extractp.pft	nam	UNK	No entry present
7	obstrp.pft	f_code	AF010	Chimney/Smokestack
8	obstrp.pft	f_code	AF030	Cooling Tower
9	obstrp.pft	f_code	AF040	Crane
10	obstrp.pft	f_code	AF070	Flare Pipe
11	obstrp.pft	f_code	AJ050	Windmill
12	processp.pft	f_code	AC000	Processing Plant/Treatment Plant
13	processp.pft	nam	UNK	No entry present
14	rigwellp.pft	f_code	AA040	Rig/Superstructure
15	rigwellp.pft	f_code	AA050	Well
16	rigwellp.pft	f_code	AC020	Catalytic Cracker
17	rigwellp.pft	nam	UNK	No entry present
18	storagep.pft	f_code	AM060	Storage Bunker/Storage Mound
19	storagep.pft	f_code	AM070	Tank
20	storagep.pft	f_code	AM080	Water Tower
21	towerp.pft	f_code	AL240	Tower (Non-communication)
22	indl.lft	f_code	AF020	Conveyor
23	indl.lft	f_code	BH060	Flume
24	indl.lft	f_code	FA090	Geophysical Prospecting Grid
25	agstorea.aft	f_code	AM020	Grain Bin/Silo
26	agstorea.aft	f_code	AM030	Grain Elevator
27	disposea.aft	f_code	AB000	Disposal Site/Waste Pile
28	disposea.aft	f_code	AB010	Wrecking Yard/Scrap Yard
29	extracta.aft	f_code	AA010	Mine
30	extracta.aft	f_code	AA012	Quarry
31	extracta.aft	nam	UNK	No entry present
32	indvoida.aft	f_code	ZD020	Void Collection Area
33	nucleara.aft	f_code	AL140	Particle Accelerator
34	processa.aft	f_code	AC000	Processing Plant/Treatment Plant
35	processa.aft	nam	UNK	No entry present
36	storagea.aft	f_code	AM010	Depot (Storage)
37	storagea.aft	f_code	AM060	Storage Bunker/Storage Mound

TABLE E-89. Industry Character Value Description Table (Continued).

38	storagea.aft	f_code	AM070	Tank
39	stockyda.aft	f_code	AJ030	Feed Lot/Stockyard/Holding Pen
40	indtxt.tft	f_code	ZD040	Named Location
41	indtxt.tft	f_code	ZD045	Text Description
42	fca	type	A	Area feature
43	fca	type	L	Line Feature
44	fca	type	P	Point/Node Feature
45	fca	type	T	Text Feature

E.3.6.1 Industry coverage glossary.

AA010 Mine (P,A) An excavation made in the earth for the purpose of extracting natural deposits.
EXS Existence Category (P,A) The state or condition of the feature.
MIN Mining Category (P,A) Unique mining characteristic.
NAM Name (P,A) Any Identifier or code.
PRO Product Category (P,A) Principal material involved or product resulting from activity at site.

AA012 Quarry (P,A) An excavation created by removal of stone by blasting or cutting.
EXS Existence Category (P,A) The state or condition of the feature.
PRO Product Category (P,A) Principal material involved or product resulting from activity at site.

AA040 Rig/Superstructure (P) A vertical structure fitted for drilling or lifting operations.
EXS Existence Category (P) The state or condition of the feature.
HGT Height Above Surface Level (meters) (P) Distance measured from the lowest point of the base at ground or water level (downhill side/downstream side) to the tallest point of the feature.
LOC Location Category (P) Status of feature relative to surrounding area or water.
PRO Product Category (P) Principal material involved or product resulting from activity at site.
ZV2 Highest Z-Value (meters) (P) Elevation above a given datum to the highest portion of the feature.

AA050 Well (P) A hole drilled into the earth or sea bed for extraction of liquids or gasses.
EXS Existence Category (P) The state or condition of the feature.
NAM Name (P) Any Identifier or code.
PRO Product Category (P) Principal material involved or product resulting from activity at site.

AB000 Disposal Site/Waste Pile (A) An area for the collecting/depositing of refuse or discarded material. (See Also AB010, AM010, and AM040).
PRO Product Category (A) Principal material involved or product resulting from activity at site.

AB010 Wrecking Yard/Scrap Yard (A) An area or site engaged in the wrecking, dismantling, storage, or resale of discarded products. (See also AB000).

AC000 Processing Plant/Treatment Plant (P,A) A site used for changing or refining a particular material.
NAM Name (P,A) Any Identifier or code.
PRO Product Category (P,A) Principal material involved or product resulting from activity at site.
EXS Existence Category (P,A) The state or condition of the feature.
YHT Height Range with Greater Precision (P,A) Value indicating precise range in height(meters) within delineated area of feature.

AC020 Catalytic Cracker (P) A unit in which petroleum separation is carried out in the presence of catalyst.
YHT Height Range with Greater Precision (P) Value indicating precise range in height(meters) within delineated area of feature.

AF010 Chimney/Smokestack (P) A vertical structure containing a passage or flue for discharging smoke and gases of combustion.
EXS Existence Category (P) The state or condition of the feature.
HGT Height Above Surface Level (meters) (P) Distance measured from the lowest point of the base at ground or water level (downhill side/downstream side) to the tallest point of the feature.
ZV2 Highest Z-Value (meters) (P) Elevation above a given datum to the highest portion of the feature.

AF020 Conveyor (L) An apparatus for moving material from place to place on a moving belt or series or roller.

AF030 Cooling Tower (P) A tower used to cool liquids.
EXS Existence Category (P) The state or condition of the feature.
HGT Height Above Surface Level (meters) (P) Distance measured from the lowest point of the base at ground or water level (downhill side/downstream side) to the tallest point of the feature.
ZV2 Highest Z-Value (meters) (P) Elevation above a given datum to the highest portion of the feature.

AF040 Crane (P) A machine for lifting , shifting, and lowering objects or materials by means of swinging boom or with the lifting apparatus supported on an overhead track.
EXS Existence Category (P) The state or condition of the feature.
HGT Height Above Surface Level (meters) (P) Distance measured from the lowest point of the base at ground or water level (downhill side/downstream side) to the tallest point of the feature.
ZV2 Highest Z-Value (meters) (P) Elevation above a given datum to the highest portion of the feature.

AF070 Flare Pipe (P) An open ended pipe at which waste gases are burned.
EXS Existence Category (P) The state or condition of the feature.
HGT Height Above Surface Level (meters) (P) Distance measured from the lowest point of the base at ground or water level (downhill side/downstream side) to the tallest point of the feature.
LOC Location Category (P) Status of feature relative to surrounding area or water.
ZV2 Highest Z-Value (meters) (P) Elevation above a given datum to the highest portion of the feature.

AJ030 Feed Lot/Stockyard/Holding Pen (A) An enclosed area in which livestock are temporarily kept.

AJ050 Windmill (P) A wind driven system of vanes attached to a tower like structure (excluding wind-generated power plants).
EXS Existence Category (P) The state or condition of the feature.
HGT Height Above Surface Level (meters) (P) Distance measured from the lowest point of the base at ground or water level (downhill side/downstream side) to the tallest point of the feature.
ZV2 Highest Z-Value (meters) (P) Elevation above a given datum to the highest portion of the feature.

AL140 Particle Accelerator (A) An apparatus for imparting high velocities to charged particles.
LEN Length/Diameter (meters) (A) A measurement of the longer of two linear axes in meters. For a square feature, measure either axis. For a round feature, measure the diameter.

AL240 Tower (Non-communication) (P) A relatively tall structure which may be used for observation, support, or storage etc. (See also AF030, AM080, AQ060, and BI050).
EXS Existence Category (P) The state or condition of the feature.
HGT Height Above Surface Level (meters) (P) Distance measured from the lowest point of the base at ground or water level (downhill side/downstream side) to the tallest point of the feature.
TTC Tower Type Category (P) Appearance, or configuration of the feature.
ZV2 Highest Z-Value (meters)(P) Elevation above a given datum to the highest portion of the feature.

AM010 Depot (Storage) (A) An area used for storage of products or supplies. (See also AB000).
LOC Location Category (A) Status of feature relative to surrounding area or water.
WID Width (meters) (A) A measurement of the shorter of two linear axes. For a square feature, measure either axis. For a round feature, width shall be equal to LEN.

AM020 Grain Bin/Silo (P,A) An enclosed container, used for storing grain or fodder.
EXS Existence Category (P) The state or condition of the feature.
HGT Height Above Surface Level (meters) (P) Distance measured from the lowest point of the base at ground or water level (downhill side/downstream side) to the tallest point of the feature.
LEN Length/Diameter (meters) (P,A) A measurement of the longer of two linear axes in meters. For a square feature, measure either axis. For a round feature, measure the diameter.
ZV2 Highest Z-Value (meters) (P) Elevation above a given datum to the highest portion of the feature.

AM030 Grain Elevator (P,A) A tall structure, equipped for loading, unloading, processing, and storing grain.
EXS Existence Category (P) The state or condition of the feature.
HGT Height Above Surface Level (meters) (P,A) Distance measured from the lowest point of the base at ground or water level (downhill side/downstream side) to the tallest point of the feature.
LEN Length/Diameter (meters) (P,A) A measurement of the longer of two linear axes in meters. For a square feature, measure either axis. For a round feature, measure the diameter.
ZV2 Highest Z-Value (meters) (P) Elevation above a given datum to the highest portion of the feature.

AM060 Storage Bunker/Storage Mound (P,A) A structure which may be covered or surrounded with earth which is resistant to ordinance where materials or products are stored.
LEN Length/Diameter (meters) (P,A) A measurement of the longer of two linear axes in meters. For a square feature, measure either axis. For a round feature, measure the diameter.
PRO Product Category (P,A) Principal material involved or product resulting from activity at site.

AM070 Tank (P,A) A container used for storage of liquids or gases.
EXS Existence Category (P,A) The state or condition of the feature.
HGT Height Above Surface Level (meters) (P,A) Distance measured from the lowest point of the base at ground or water level (downhill side/downstream side) to the tallest point of the feature.
LEN Length/Diameter (meters) (P,A) A measurement of the longer of two linear axes in meters. For a square feature, measure either axis. For a round feature, measure the diameter.
LOC Location Category (P,A) Status of feature relative to surrounding area or water.
PRO Product Category (P,A) Principal material involved or product resulting from activity at site.
ZV2 Highest Z-Value (meters) (P) Elevation above a given datum to the highest portion of the feature.

AM080 Water Tower (P) An elevated container and its supporting structure used to hold water.
EXS Existence Category (P) The state or condition of the feature.
HGT Height Above Surface Level (meters) (P) Distance measured from the lowest point of the base at ground or water level (downhill side/downstream side) to the tallest point of the feature.
ZV2 Highest Z-Value (meters) (P) Elevation above a given datum to the highest portion of the feature.

BH060 Flume (L) An open, inclined channel which carries water for use in such operations as mining or logging.
LOC Location Category (L) Status of feature relative to surrounding area or water.

BI010 Cistern (P) A man-made container used for collection or storage of rain water.

FA090 Geophysical Prospecting Grid (L) A grid established for the collection of geophysical data within an area.

ZD020 Void Collection Area (A) An area lacking suitable source coverage, or where data is not required.
VCA Void Collection Attribute (A) Reason data is not collected.

ZD040 Named Location (T) A geographic place on earth, not normally appearing as a feature on a map, but having a name that is required to be placed on a map.

ZD045 Text Description (T) An area in which a characteristic or an activity pertaining to the area can be described and possibly is labeled on a product if deemed important at the time the product is being produced.

TABLE E-90. Industry Integer Value Description Table.

Thematic Layer: Industry
Coverage Name: ind
Feature Table Description: Industry Integer Value Description Table
Table Name: int.vdt
DQ Layer Number: 4

{Header length}L;
Industry Integer Value Description Table;-;
id=I,1,P,Row Identifier,-,-,-,:
table=T,12,N,Name of the Feature Table,-,-,-,:
attribute=T,3,N,Column Name,-,-,-,:
value=S,1,N,Unique Value of Attribute,-,-,-,:
description=T,*,N,Description of Value,-,-,-,:;

1	agstorep.pft	exs	0	Unknown
2	agstorep.pft	exs	1	Definite
3	agstorep.pft	exs	2	Doubtful
4	agstorep.pft	exs	3	Reported
5	agstorep.pft	hgt	0	Unknown
6	agstorep.pft	len	0	Unknown
7	agstorep.pft	zv2	29999	Unknown
8	extractp.pft	exs	0	Unknown
9	extractp.pft	exs	6	Abandoned/Disused
10	extractp.pft	exs	28	Operational
11	extractp.pft	min	0	Unknown
12	extractp.pft	min	2	Horizontal Shaft
13	extractp.pft	min	3	Open Pit
14	extractp.pft	min	4	Placer
15	extractp.pft	min	5	Prospect
16	extractp.pft	min	6	Strip
17	extractp.pft	min	7	Vertical Shaft
18	extractp.pft	min	8	Peat Cuttings
19	extractp.pft	pro	0	Unknown
20	extractp.pft	pro	16	Clay
21	extractp.pft	pro	17	Coal
22	extractp.pft	pro	23	Copper
23	extractp.pft	pro	42	Gold
24	extractp.pft	pro	46	Gravel
25	extractp.pft	pro	51	Iron
26	extractp.pft	pro	54	Lead
27	extractp.pft	pro	84	Rock/Rocky
28	extractp.pft	pro	87	Salt
29	extractp.pft	pro	88	Sand
30	extractp.pft	pro	100	Silver
31	extractp.pft	pro	112	Uranium
32	extractp.pft	pro	118	Zinc
33	extractp.pft	pro	119	Bauxite
34	extractp.pft	pro	999	Other
35	obstrp.pft	exs	0	Unknown
36	obstrp.pft	exs	1	Definite
37	obstrp.pft	exs	2	Doubtful

TABLE E-89. Industry Character Value Description Table (Continued).

38	obstrp.pft	exs	3	Reported
39	obstrp.pft	hgt	0	Unknown
40	obstrp.pft	loc	0	Unknown
41	obstrp.pft	loc	8	On Ground Surface
42	obstrp.pft	loc	22	Offshore
43	obstrp.pft	zv2	29999	Unknown
44	processp.pft	pro	0	Unknown
45	processp.pft	pro	2	Aluminum
46	processp.pft	pro	5	Asphalt
47	processp.pft	pro	9	Brick
48	processp.pft	pro	11	Cement
49	processp.pft	pro	13	Chemical
50	processp.pft	pro	19	Coke
51	processp.pft	pro	23	Copper
52	processp.pft	pro	33	Explosives
53	processp.pft	pro	39	Gasoline
54	processp.pft	pro	40	Glass
55	processp.pft	pro	42	Gold
56	processp.pft	pro	50	Heat
57	processp.pft	pro	51	Iron
58	processp.pft	pro	54	Lead
59	processp.pft	pro	56	Lumber
60	processp.pft	pro	64	Metal
61	processp.pft	pro	67	Oil
62	processp.pft	pro	71	Paper
63	processp.pft	pro	82	Radioactive Material
64	processp.pft	pro	85	Rubber
65	processp.pft	pro	95	Sewage
66	processp.pft	pro	100	Silver
67	processp.pft	pro	107	Steel
68	processp.pft	pro	112	Uranium
69	processp.pft	pro	113	Vegetation Products
70	processp.pft	pro	116	Water
71	processp.pft	pro	118	Zinc
72	processp.pft	pro	999	Other
73	processp.pft	exs	0	Unknown
74	processp.pft	exs	5	Under Construction
75	processp.pft	exs	6	Abandoned/Disused
76	processp.pft	exs	7	Destroyed
77	processp.pft	exs	28	Operational
78	processp.pft	exs	601	Damaged
79	processp.pft	yht	0	Unknown
80	processp.pft	yht	1	<= 0.5
81	processp.pft	yht	2	> 0.5 and <= 1.0
82	processp.pft	yht	3	> 1.0 and <= 1.5
83	processp.pft	yht	4	> 1.5 and <= 2.0
84	processp.pft	yht	5	> 2.0 and <= 5.0
85	processp.pft	yht	6	> 5.0 and <= 10.0
86	processp.pft	yht	7	> 10.0 and <= 20.0
87	processp.pft	yht	8	> 20.0 and <= 35.0
88	processp.pft	yht	9	> 35.0

TABLE E-89. Industry Character Value Description Table (Continued).

89	rigwellp.pft	exs	0	Unknown
90	rigwellp.pft	exs	1	Definite
91	rigwellp.pft	exs	2	Doubtful
92	rigwellp.pft	exs	3	Reported
93	rigwellp.pft	exs	5	Under Construction
94	rigwellp.pft	exs	6	Abandoned/Disused
95	rigwellp.pft	exs	7	Destroyed
96	rigwellp.pft	exs	28	Operational
97	rigwellp.pft	exs	601	Damaged
98	rigwellp.pft	hgt	0	Unknown
99	rigwellp.pft	loc	0	Unknown
100	rigwellp.pft	loc	22	Offshore
101	rigwellp.pft	loc	999	Other
102	rigwellp.pft	pro	0	Unknown
103	rigwellp.pft	pro	38	Gas
104	rigwellp.pft	pro	67	Oil
105	rigwellp.pft	zv2	29999	Unknown
106	rigwellp.pft	yht	0	Unknown
107	rigwellp.pft	yht	1	<= 0.5
108	rigwellp.pft	yht	2	> 0.5 and <= 1.0
109	rigwellp.pft	yht	3	> 1.0 and <= 1.5
110	rigwellp.pft	yht	4	> 1.5 and <= 2.0
111	rigwellp.pft	yht	5	> 2.0 and <= 5.0
112	rigwellp.pft	yht	6	> 5.0 and <= 10.0
113	rigwellp.pft	yht	7	> 10.0 and <= 20.0
114	rigwellp.pft	yht	8	> 20.0 and <= 35.0
115	rigwellp.pft	yht	9	> 35.0
116	storagep.pft	exs	0	Unknown
117	storagep.pft	exs	1	Definite
118	storagep.pft	exs	2	Doubtful
119	storagep.pft	exs	3	Reported
120	storagep.pft	exs	5	Under Construction
121	storagep.pft	exs	6	Abandoned/Disused
122	storagep.pft	exs	7	Destroyed
123	storagep.pft	exs	28	Operational
124	storagep.pft	exs	601	Damaged
125	storagep.pft	hgt	0	Unknown
126	storagep.pft	len	0	Unknown
127	storagep.pft	loc	0	Unknown
128	storagep.pft	loc	4	Below Surface/Submerged/Underground
129	storagep.pft	loc	8	On Ground Surface
130	storagep.pft	pro	0	Unknown
131	storagep.pft	pro	1	Aircraft
132	storagep.pft	pro	3	Ammunition
133	storagep.pft	pro	13	Chemical
134	storagep.pft	pro	33	Explosives
135	storagep.pft	pro	38	Gas
136	storagep.pft	pro	39	Gasoline
137	storagep.pft	pro	67	Oil
138	storagep.pft	pro	82	Radioactive Material
139	storagep.pft	pro	112	Uranium

TABLE E-89. Industry Character Value Description Table (Continued).

140	storagep.pft	pro	116	Water
141	storagep.pft	pro	131	Personnel
142	storagep.pft	pro	999	Other
143	storagep.pft	zv2	29999	Unknown
144	towerp.pft	exs	0	Unknown
145	towerp.pft	exs	1	Definite
146	towerp.pft	exs	2	Doubtful
147	towerp.pft	exs	3	Reported
148	towerp.pft	hgt	0	Unknown
149	towerp.pft	ttc	0	Unknown
150	towerp.pft	ttc	2	Observation/Lookout
151	towerp.pft	ttc	3	Other
152	towerp.pft	zv2	29999	Unknown
153	indl.lft	loc	0	Unknown
154	indl.lft	loc	8	On Ground Surface
155	indl.lft	loc	25	Suspended/Elevated above Ground or Water Surface
156	agstorea.aft	hgt	0	Unknown
157	agstorea.aft	len	0	Unknown
158	disposea.aft	pro	0	Unknown
159	disposea.aft	pro	101	Slag
160	disposea.aft	pro	127	Tailings
161	disposea.aft	pro	128	Refuse
162	extracta.aft	exs	0	Unknown
163	extracta.aft	exs	6	Abandoned/Disused
164	extracta.aft	exs	28	Operational
165	extracta.aft	min	0	Unknown
166	extracta.aft	min	2	Horizontal Shaft
167	extracta.aft	min	3	Open Pit
168	extracta.aft	min	4	Placer
169	extracta.aft	min	5	Prospect
170	extracta.aft	min	6	Strip
171	extracta.aft	min	7	Vertical Shaft
172	extracta.aft	min	8	Peat Cuttings
173	extracta.aft	pro	0	Unknown
174	extracta.aft	pro	16	Clay
175	extracta.aft	pro	17	Coal
176	extracta.aft	pro	23	Copper
177	extracta.aft	pro	42	Gold
178	extracta.aft	pro	46	Gravel
179	extracta.aft	pro	51	Iron
180	extracta.aft	pro	54	Lead
181	extracta.aft	pro	84	Rock/Rocky
182	extracta.aft	pro	87	Salt
183	extracta.aft	pro	88	Sand
184	extracta.aft	pro	100	Silver
185	extracta.aft	pro	112	Uranium
186	extracta.aft	pro	118	Zinc
187	extracta.aft	pro	119	Bauxite
188	extracta.aft	pro	999	Other
189	indvoida.aft	vca	0	Unknown

TABLE E-89. Industry Character Value Description Table (Continued).

190	indvoida.aft	vca	2	Area Too Rough to Collect
191	indvoida.aft	vca	3	No Available Imagery
192	indvoida.aft	vca	6	No Available Map Source
193	indvoida.aft	vca	7	No Suitable Imagery
194	nucleara.aft	len	0	Unknown
195	processa.aft	pro	0	Unknown
196	processa.aft	pro	2	Aluminum
197	processa.aft	pro	5	Asphalt
198	processa.aft	pro	9	Brick
199	processa.aft	pro	11	Cement
200	processa.aft	pro	13	Chemical
201	processa.aft	pro	23	Copper
202	processa.aft	pro	33	Explosives
203	processa.aft	pro	39	Gasoline
204	processa.aft	pro	40	Glass
205	processa.aft	pro	42	Gold
206	processa.aft	pro	50	Heat
207	processa.aft	pro	51	Iron
208	processa.aft	pro	54	Lead
209	processa.aft	pro	56	Lumber
210	processa.aft	pro	64	Metal
211	processa.aft	pro	67	Oil
212	processa.aft	pro	71	Paper
213	processa.aft	pro	82	Radioactive Material
214	processa.aft	pro	85	Rubber
215	processa.aft	pro	95	Sewage
216	processa.aft	pro	100	Silver
217	processa.aft	pro	107	Steel
218	processa.aft	pro	112	Uranium
219	processa.aft	pro	113	Vegetation Products
220	processa.aft	pro	116	Water
221	processa.aft	pro	118	Zinc
222	processa.aft	pro	999	Other
223	processa.aft	exs	0	Unknown
224	processa.aft	exs	5	Under Construction
225	processa.aft	exs	6	Abandoned/Disused
226	processa.aft	exs	7	Destroyed
227	processa.aft	exs	28	Operational
228	processa.aft	exs	601	Damaged
229	processa.aft	yht	0	Unknown
230	processa.aft	yht	1	<= 0.5
231	processa.aft	yht	2	> 0.5 and <= 1.0
232	processa.aft	yht	3	> 1.0 and <= 1.5
233	processa.aft	yht	4	> 1.5 and <= 2.0
234	processa.aft	yht	5	> 2.0 and <= 5.0
235	processa.aft	yht	6	> 5.0 and <= 10.0
236	processa.aft	yht	7	> 10.0 and <= 20.0
237	processa.aft	yht	8	> 20.0 and <= 35.0
238	processa.aft	yht	9	> 35.0
239	storagea.aft	exs	0	Unknown
240	storagea.aft	exs	5	Under Construction

TABLE E-89. Industry Character Value Description Table (Continued).

241	storagea.aft	exs	6	Abandoned/Disused
242	storagea.aft	exs	7	Destroyed
243	storagea.aft	exs	28	Operational
244	storagea.aft	exs	601	Damaged
245	storagea.aft	hgt	0	Unknown
246	storagea.aft	len	0	Unknown
247	storagea.aft	loc	0	Unknown
248	storagea.aft	loc	4	Below Surface/Submerged/Underground
249	storagea.aft	loc	8	On Ground Surface
250	storagea.aft	pro	0	Unknown
251	storagea.aft	pro	1	Aircraft
252	storagea.aft	pro	3	Ammunition
253	storagea.aft	pro	13	Chemical
254	storagea.aft	pro	33	Explosives
255	storagea.aft	pro	38	Gas
256	storagea.aft	pro	39	Gasoline
257	storagea.aft	pro	67	Oil
258	storagea.aft	pro	82	Radioactive Material
259	storagea.aft	pro	112	Uranium
260	storagea.aft	pro	116	Water
261	storagea.aft	pro	131	Personnel
262	storagea.aft	pro	999	Other
263	storagea.aft	wid	0	Unknown

E.3.7 Obstacles coverage.

TABLE E-91. Content and format for Obstacles coverage feature class schema table.

Thematic Layer: Obstacles
Coverage Name: obs
Feature Table Description: Obstacles Feature Class Schema Table
Table Name: fcs
DQ Layer Number: 5

{Header length}L;
Obstacles Feature Class Schema Table;-;
id=I,1,P,Row Identifier,-,-,-,:
feature_class=T,8,N,Name of Feature Class,-,-,-,:
table1=T,12,N,First Table,-,-,-,:
table1_key=T,16,N,Column Name in First Table,-,-,-,:
table2=T,12,N,Second Table,-,-,-,:
table2_key=T,16,N,Column Name in Second Table,-,-,-,:;

1	obsmanl	obsmanl.lft	id	obsmanl.ljt	obsmanl.lft_id
2	obsmanl	obsmanl.ljt	edg_id	edg	id
3	obsmanl	edg	id	obsmanl.ljt	edg_id
4	obsmanl	obsmanl.ljt	obsmanl.lft_id	obsmanl.lft	id
5	obsmandl	obsmandl.lft	id	obsmandl.ljt	obsmandl.lft_id
6	obsmandl	obsmandl.ljt	edg_id	edg	id
7	obsmandl	edg	id	obsmandl.ljt	edg_id
8	obsmandl	obsmandl.ljt	obsmandl.lft_id	obsmandl.lft	id
9	misobsl	misobsl.lft	id	misobsl.ljt	misobsl.lft_id
10	misobsl	misobsl.ljt	edg_id	edg	id
11	misobsl	edg	id	misobsl.ljt	edg_id
12	misobsl	misobsl.ljt	misobsl.lft_id	misobsl.lft	id
13	obsline	obsline.lft	id	obsline.ljt	obsline.lft_id
14	obsline	obsline.ljt	edg_id	edg	id
15	obsline	edg	id	obsline.ljt	edg_id
16	obsline	obsline.ljt	obsline.lft_id	obsline.lft	id
17	misobsa	misobsa.aft	id	misobsa.ajt	misobsa.aft_id
18	misobsa	misobsa.ajt	fac_id	fac	id
19	misobsa	fac	id	misobsa.ajt	fac_id
20	misobsa	misobsa.ajt	misobsa.aft_id	misobsa.aft	id
21	obsvoida	obsvoida.aft	id	obsvoida.ajt	obsvoida.aft_id
22	obsvoida	obsvoida.ajt	fac_id	fac	id
23	obsvoida	fac	id	obsvoida.ajt	fac_id
24	obsvoida	obsvoida.ajt	obsvoida.aft_id	obsvoida.aft	id
25	teetha	teetha.aft	id	teetha.ajt	teetha.aft_id
26	teetha	teetha.ajt	fac_id	fac	id
27	teetha	fac	id	teetha.ajt	fac_id
28	teetha	teetha.ajt	teetha.aft_id	teetha.aft	id

TABLE E-92. Manmade Obstacle Line Join Table.

(This table is used to combine linear obstacle features with their associated edge primitives in a one-to-many relationship.)

```
{Header length}L;
Manmade Obstacle Line Join Table;-;
id=I,1,P,Row Identifier,-,-,-,:
obsmanl.lft_id=I,1,N,Feature Key,-,obsmanl.jti,-,:
tile_id=S,1,N,Tile Reference ID,-,tile1_id.jti,-,:
edg_id=I,1,N,Edge Primitive ID,-,edg1_id.jti,-,:;
```

TABLE E-93. Manmade Obstacle Line Feature Table.

Thematic Layer: Obstacles
Coverage Name; obs
Feature Table Description: Manmade Obstacle Line Feature Table
Table Name: obsmanl.lft
DQ Layer Number: 5
Portrayal Criteria: For AL060 length >= 125 meters and width < 125 meters, and for AL070 and AL260 length >= 125 meters and height >= 2.0 meters.

```
{Header length}L;
Manmade Obstacle Line Feature Table;-;
id=I,1,P,Row Identifier,-,-,-,:
f_code=T,5,N,FACC Feature Code,char.vdt,f_code1.lti,-,:
ohd=S,1,N,Derived Obstacle Height/Depth Category,int.vdt,-,-,:
fti=S,1,N,Fence Type Indicator,int.vdt,-,-,:
mcc=S,1,N,Material Composition Category,int.vdt,-,-,:
pfh=S,1,N,Predominant Feature Height (decimeters),int.vdt,-,-,:
wid=S,1,N,Width (meters),int.vdt,-,-,:
wti=S,1,N,Wall Type Identifier,int.vdt,-,-,:;
```

Column	Description	Value	Value Meaning	Applicable f_code for Each Attribute Value
id	Row Identifier	Sequential beginning with 1		
f_code	FACC Feature Code			
		AL060	Dragon Teeth	
		AL070	Fence	
		AL260	Wall	

TABLE E-93. Manmade Obstacle Line Feature Table (Continued).

ohd	Derived Obstacle Height/Depth Category			
		0	Unknown	AL060,AL070, AL260
		1	> 1.5 and <= 5.0	AL060,AL070, AL260
		2	> 5.0 and <= 10.0	AL060,AL070, AL260
		3	> 10.0 and <= 20.0	AL060,AL070, AL260
		4	> 20.0 and <= 40.0	AL060,AL070, AL260
		5	> 40.0	AL060,AL070, AL260
fti	Fence Type Indicator			
		-32768	Null	AL060,AL260
		0	Unknown	AL070
		1	Metal	AL070
		2	Wood	AL070
		3	Stone	AL070
		5	Barbed Wire	AL070
		6	Chain Link	AL070
		999	Other	AL070
mcc	Material Composition Category			
		-32768	Null	AL060,AL070
		0	Unknown	AL260
		9	Brick	AL260
		21	Concrete	AL260
		108	Stone	AL260
		999	Other	AL260
pfh	Predominant Feature Height (decimeters)			
		0	Unknown	AL060,AL070, AL260
		> 0		AL060
		>= 20		AL070,AL260
wid	Width (meters)			
		-32768	Null	AL070,AL260
		0	Unknown	AL060
		< 125		AL060
wti	Wall Type Identifier			
		-32768	Null	AL060,AL070
		0	Unknown	AL260
		1	Standing	AL260
		2	Retaining	AL260
		999	Other	AL260

TABLE E-94. Depth Obstacle Line Join Table.

(This table is used to combine linear obstacle features with their associated edge primitives in a one-to-many relationship.)

```
{Header length}L;
Depth Obstacle Line Join Table;-;
id=I,1,P,Row Identifier,-,-,-,:
obsmandl.lft_id=I,1,N,Feature Key,-,obsmandl.jti,-,:
tile_id=S,1,N,Tile Reference ID,-,tile2_id.jti,-,:
edg_id=I,1,N,Edge Primitive ID,-,edg2_id.jti,-,:;
```

TABLE E-95. Depth Obstacle Line Feature Table.

Thematic Layer: Obstacles
Coverage Name; obs
Feature Table Description: Depth Obstacle Line Feature Table
Table Name: obsmandl.lft
DQ Layer Number: 5
Portrayal Criteria: For BH100 length >= 250 meters, width >= 3 meters, depth >= 2.0 meters, and slope >= 100%, and for DB070 and DB080 length >= 125 meters, depth >= 2.0 meters, and slope >= 100%.

```
{Header length}L;
Depth Obstacle Line Feature Table;-;
id=I,1,P,Row Identifier,-,-,-,:
f_code=T,5,N,FACC Feature Code,char.vdt,f_code2.lti,-,:
ohd=S,1,N,Derived Obstacle Height/Depth Category,int.vdt,-,-,:
hyc=S,1,N,Hydrological Category,int.vdt,-,-,:
pfd=S,1,N,Predominant Feature Depth (decimeters),int.vdt,-,-,:
sgc=S,1,N,Gradient/Slope (percent),int.vdt,-,-,:
wid=S,1,N,Width (meters),int.vdt,-,-,:;
```

Column	Description	Value	Value Meaning	Applicable f_code for Each Attribute Value
id	Row Identifier	Sequential beginning with 1		
f_code	FACC Feature Code			
		BH100	Moat	
		DB070	Cut	
		DB080	Depression	
ohd	Derived Obstacle Height/Depth Category			
		0	Unknown	BH100,DB070,DB080
		1	> 1.5 and <= 5.0	BH100,DB070,DB080
		2	> 5.0 and <= 10.0	BH100,DB070,DB080
		3	> 10.0 and <= 20.0	BH100,DB070,DB080
		4	> 20.0 and <= 40.0	BH100,DB070,DB080
		5	> 40.0	BH100,DB070,DB080

TABLE E-95. Depth Obstacle Line Feature Table (Continued).

hyc	Hydrological Category			
		-32768	Null	DB070,DB080
		0	Unknown	BH100
		3	Dry	BH100
		8	Perennial/ Permanent	BH100
pfd	Predominant Feature Depth (decimeters)			
		0	Unknown	BH100,DB070,DB080
		>= 20		BH100,DB070,DB080
sgc	Gradient/Slope (percent)			
		999	Unknown	BH100,DB070,DB080
		>= 100		BH100,DB070,DB080
wid	Width (meters)			
		-32768	Null	DB070,DB080
		0	Unknown	BH100
		>=3		BH100

TABLE E-96. Miscellaneous Obstacle Line Join Table.
(This table is used to combine linear obstacle features with their associated edge primitives in a one-to-many relationship.)

```
{Header length}L;
Miscellaneous Obstacle Line Join Table;-;
id=I,1,P,Row Identifier,-,-,-,:
misobsl.lft_id=I,1,N,Feature Key,-,misobsl.jti,-,:
tile_id=S,1,N,Tile Reference ID,-,tile3_id.jti,-,:
edg_id=I,1,N,Edge Primitive ID,-,edg3_id.jti,-,:;
```

TABLE E-97. Miscellaneous Obstacle Line Feature Table.

Thematic Layer: Obstacles
Coverage Name; obs
Feature Table Description: Miscellaneous Obstacle Line Feature Table
Table Name: misobsl.lft
DQ Layer Number: 5
Portrayal Criteria: Feature's length >= 250 meters, depth or height >= 2.0 meters, slope >= 100%, and width < 50 meters and has military significance.

```
{Header length}L;
Miscellaneous Obstacle Line Feature Table;-;
id=I,1,P,Row Identifier,-,-,-,:
f_code=T,5,N,FACC Feature Code,char.vdt,-,-,:
ohd=S,1,N,Derived Obstacle Height/Depth Category,int.vdt,-,-,:
pfd=S,1,N,Predominant Feature Depth (decimeters),int.vdt,-,-,:
pfh=S,1,N,Predominant Feature Height (decimeters),int.vdt,-,-,:
sgc=S,1,N,Gradient/Slope (percent),int.vdt,-,-,:
txt=T,*,N,Text Attribute,char.vdt,-,-,:;
```

Column	Description	Value	Value Meaning	Applicable f_code for Each Attribute Value
id	Row Identifier	Sequential beginning with 1		
f_code	FACC Feature Code			
		DB145	Miscellaneous Obstacle	
ohd	Derived Obstacle Height/Depth Category			
		0	Unknown	DB145
		1	> 1.5 and <= 5.0	DB145
		2	> 5.0 and <= 10.0	DB145
		3	> 10.0 and <= 20.0	DB145
		4	> 20.0 and <= 40.0	DB145
		5	> 40.0	DB145
pfd	Predominant Feature Depth (decimeters)			
		-32768	Null	DB145 pfh<>-32768
		0	Unknown	DB145 pfh=-32768
		>= 20		DB145 pfh=-32768

TABLE E-97. Miscellaneous Obstacle Line Feature Table (Continued).

pfh	Predominant Feature Height (decimeters)			
		-32768	Null	DB145 pfd<>-32768
		0	Unknown	DB145 pfd=-32768
		>= 20		DB145 pfd=-32768
sgc	Gradient/Slope (percent)			
		999	Unknown	DB145
		>= 100		DB145
txt	Text Attribute			
		UNK (No entry present)		DB145
		Character text string		DB145

TABLE E-98. Obstacle Line Join Table.

(This table is used to combine linear obstacle features with their associated edge primitives in a one-to-many relationship.)

```
{Header length}L;
Obstacle Line Join Table;-;
id=I,1,P,Row Identifier,-,-,-,:
obsline.lft_id=I,1,N,Feature Key,-,obsline.jti,-,:
tile_id=S,1,N,Tile Reference ID,-,tile4_id.jti,-,:
edg_id=I,1,N,Edge Primitive ID,-,edg4_id.jti,-,:;
```

TABLE E-99. Obstacle Line Feature Table.

Thematic Layer: Obstacles
Coverage Name; obs
Feature Table Description: Obstacle Line Feature Table
Table Name: obsline.lft
DQ Layer Number: 5
Portrayal Criteria: For DB010, DB090, and DB190 length >= 125 meters, height >= 2.0 meters for DB010 and DB190, and for DB010, DB090, DB190 slope >= 100%, and for EA020 length >= 500 meters or landmark, but height >= 2.0 meters.

```
{Header length}L;
Obstacle Line Feature Table;-;
id=I,1,P,Row Identifier,-,-,-,:
f_code=T,5,N,FACC Feature Code,char.vdt,f_code4.lti,-,:
ohd=S,1,N,Derived Obstacle Height/Depth Category,int.vdt,-,-,:
pfh=S,1,N,Predominant Feature Height (decimeters),int.vdt,-,-,:
sgc=S,1,N,Gradient/Slope (percent),int.vdt,-,-,:
use=S,1,N,Usage,int.vdt,-,-,:;
```

Column	Description	Value	Value Meaning	Applicable f_code for Each Attribute Value
id	Row Identifier	Sequential beginning with 1		
f_code	FACC Feature Code			
		DB010	Bluff/Cliff/Escarpment	
		DB090	Embankment/Fill	
		DB190	Volcanic Dike	
		EA020	Hedgerow	

TABLE E-99. Obstacle Line Feature Table (Continued).

ohd	Derived Obstacle Height/Depth Category			
		0	Unknown	DB010,DB090, DB190,EA020
		1	> 1.5 and <= 5.0	DB010,DB090, DB190,EA020
		2	> 5.0 and <= 10.0	DB010,DB090, DB190,EA020
		3	> 10.0 and <= 20.0	DB010,DB090, DB190,EA020
		4	> 20.0 and <= 40.0	DB010,DB090, DB190,EA020
		5	> 40.0	DB010,DB090, DB190,EA020
pfh	Predominant Feature Height (decimeters)			
		0	Unknown	DB010,DB090, DB190,EA020
		>= 20		DB010,DB190, EA020,DB090
sgc	Gradient/Slope (percent)			
		-32768	Null	EA020
		999	Unknown	DB010,DB090, DB190
		>= 100		DB010,DB090, DB190
use	Usage			
		-32768	Null	DB010,DB190, EA020
		0	Unknown	DB090
		69	Levee/Dike	DB090
		127	as a Causeway	DB090
		139	Fill	DB090
		999	Other	DB090

TABLE E-100. Miscellaneous Obstacle Area Join Table.

(This table is used to combine area obstacle features with their associated face primitives in a one-to-many relationship.)

```
{Header length}L;
Miscellaneous Obstacle Area Join Table;-;
id=I,1,P,Row Identifier,-,-,-,:
misobsa.aft_id=I,1,N,Feature Key,-,misobsa.jti,-,:
tile_id=S,1,N,Tile Reference ID,-,tile5_id.jti,-,:
fac_id=I,1,N,Face Primitive ID,-,fac5_id.jti,-,:;
```

TABLE E-101. Miscellaneous Obstacle Area Feature Table.

Thematic Layer: Obstacles
Coverage Name: obs
Feature Table Description: Miscellaneous Obstacle Area Feature Table
Table Name: misobsa.aft
DQ Layer Number: 5
Portrayal Criteria: Feature's length >= 250 meters, depth or height >= 2.0 meters, slope >= 100%, and width >= 50 meters and have military significance.

```
{Header length}L;
Miscellaneous Obstacle Area Feature Table;-;
id=I,1,P,Row Identifier,-,-,-,:
f_code=T,5,N,FACC Feature Code,char.vdt,-,-,:
ohd=S,1,N,Derived Obstacle Height/Depth Category,int.vdt,-,-,:
pfd=S,1,N,Predominant Feature Depth (decimeters),int.vdt,-,-,:
pfh=S,1,N,Predominant Feature Height(decimeters),int.vdt,-,-,:
sgc=S,1,N,Gradient/Slope (percent),int.vdt,-,-,:
txt=T,*,N,Text Attribute,char.vdt,-,-,:;
```

Column	Description	Value	Value Meaning	Applicable f_code for Each Attribute Value
id	Row Identifier	Sequential beginning with 1		
f_code	FACC Feature Code			
		DB145	Miscellaneous Obstacle	
ohd	Derived Obstacle Height/Depth Category			
		0	Unknown	DB145
		1	> 1.5 and <= 5.0	DB145
		2	> 5.0 and <= 10.0	DB145
		3	> 10.0 and <= 20.0	DB145
		4	> 20.0 and <= 40.0	DB145
		5	> 40.0	DB145
pfd	Predominant Feature Depth (decimeters)			
		-32768	Null	DB145 pfh<>-32768
		0	Unknown	DB145 pfh=-32768
		>= 20		DB145 pfh=-32768

TABLE E-101. Miscellaneous Obstacle Area Feature Table (Continued).

pfh	Predominant Feature Height (decimeters)			
		-32768	Null	DB145 pfd<>-32768
		0	Unknown	DB145 pfd=-32768
		>= 20		DB145 pfd=-32768
sgc	Gradient/Slope (percent)			
		999	Unknown	DB145
		>= 100		DB145
txt	Text Attribute			
		UNK	(No entry present)	DB145
		Character text string		DB145

TABLE E-102. Obstacles Void Collection Area Join Table.
(This table is used to combine area obstacle features with their associated face primitives in a one-to-many relationship.)

```
{Header length}L;
Obstacles Void Collection Area Join Table;-;
id=I,1,P,Row Identifier,-,-,-,:
obsvoida.aft_id=I,1,N,Feature Key,-,obsvoida.jti,-,:
tile_id=S,1,N,Tile Reference ID,-,tile6_id.jti,-,:
fac_id=I,1,N,Face Primitive ID,-,fac6_id.jti,-,:;
```

TABLE E-103. Obstacles Void Collection Area Feature Table.

Thematic Layer: Obstacles
Coverage Name: obs
Feature Table Description: Obstacle Void Collection Area Feature Table
Table Name: obsvoida.aft
DQ Layer Number: 5
Portrayal Criteria: For ZD020 area >= 15,625 square meters

```
{Header length}L;
Obstacles Void Collection Area Feature Table;-;
id=I,1,P,Row Identifier,-,-,-,:
f_code=T,5,N,FACC Feature Code,char.vdt,-,-,:
vca=S,1,N,Void Collection Attribute,int.vdt,-,-,:;
```

Column	Description	Value	Value Meaning	Applicable f_code for Each Attribute Value
id	Row Identifier	Sequential beginning with 1		
f_code	FACC Feature Code			
		ZD020	Void Collection Area	
vca	Void Collection Attribute			
		0	Unknown	ZD020
		2	Area Too Rough to Collect	ZD020
		3	No Available Imagery	ZD020
		6	No Available Map Source	ZD020
		7	No Suitable Imagery	ZD020

TABLE E-104. Dragon Teeth Area Join Table.

(This table is used to combine area obstacle features with their associated face primitives in a one-to-many relationship.)

```
{Header length}L;
Dragon Teeth Area Join Table;-;
id=I,1,P,Row Identifier,-,-,-,:
teetha.aft_id=I,1,N,Feature Key,-,teetha.jti,-,:
tile_id=S,1,N,Tile Reference ID,-,tile7_id.jti,-,:
fac_id=I,1,N,Face Primitive ID,-,fac7_id.jti,-,:;
```

TABLE E-105. Dragon Teeth Area Feature Table.

Thematic Layer: Obstacles
Coverage Name; obs
Feature Table Description: Dragon Teeth Area Feature Table
Table Name: teetha.aft
DQ Layer Number: 5
Portrayal Criteria: For AL060 length >= 125 meters and width >= 125 meters.

```
{Header length}L;
Dragon Teeth Area Feature Table;-;
id=I,1,P,Row Identifier,-,-,-,:
f_code=T,5,N,FACC Feature Code,char.vdt,-,-,:
ohd=S,1,N,Derived Obstacle Height/Depth Category,int.vdt,-,-,:
pfh=S,1,N,Predominant Feature Height (decimeters),int.vdt,-,-,:;
```

Column	Description	Value	Value Meaning	Applicable f_code for Each Attribute Value
id	Row Identifier	Sequential beginning with 1		
f_code	FACC Feature Code			
		AL060 Dragon Teeth		
ohd	Derived Obstacle Height/Depth Category			
		0	Unknown	AL060
		1	> 1.5 and <= 5.0	AL060
		2	> 5.0 and <= 10.0	AL060
		3	> 10.0 and <= 20.0	AL060
		4	> 20.0 and <= 40.0	AL060
		5	> 40.0	AL060
pfh	Predominant Feature Height (decimeters)			
		0	Unknown	AL060
		>0		AL060

TABLE E-106. Obstacles Feature Class Attribute Table.

Thematic Layer: Obstacles
Coverage Name: obs
Table Description: Obstacles Feature Class Attribute Table
Table Name: fca
DQ Layer Number: 5

```
{Header length}L;
Obstacles Feature Class Attribute Table;-;
id=I,1,P,Row Identifier,-,-,-,:
fclass=T,8,U,Feature Class Name,-,-,-,:
type=T,1,N,Feature Type,char.vdt,-,-,:
descr=T,*,N,Description,-,-,-,:;
```

Column	Description	Value	Value Meaning	Applicable f_code for Each Attribute Value
id	Row Identifier	Sequential beginning with 1		
fclass	Feature Class Name			
		obsmanl		
		obsmandl		
		misobsl		
		obsline		
		misobsa		
		obsvoida		
		teetha		
type	Feature Type			
		L	Line Feature	obsmanl,obsmandl, misobsl,obsline
		A	Area Feature	teetha,misobsa, obsvoida
descr	Description			
		Manmade linear obstacles		obsmanl
		Manmade depth linear obstacles		obsmandl
		Miscellaneous linear obstacles		misobsl
		Linear obstacles		obsline
		Dragon teeth area		teetha
		Miscellaneous area obstacles		misobsa
		Obstacle void collection area		obsvoida

TABLE E-107. Obstacles Character Value Description Table.

Thematic Layer: Obstacles
Coverage Name: obs
Feature Table Description: Obstacles Character Value Description Table
Table Name: char.vdt
DQ Layer Number: 5

{Header length}L;
Obstacles Character Value Description Table;-;
id=I,1,P,Row Identifier,-,-,-,:
table=T,12,N,Name of the Feature Table,-,-,-,:
attribute=T,6,N,Column Name,-,-,-,:
value=T,5,N,Unique Value of Attribute,-,-,-,:
description=T,*,N,Description of Value,-,-,-,:;

1	obsmanl.lft	f_code	AL060	Dragon Teeth
2	obsmanl.lft	f_code	AL070	Fence
3	obsmanl.lft	f_code	AL260	Wall
4	obsmandl.lft	f_code	BH100	Moat
5	obsmandl.lft	f_code	DB070	Cut
6	obsmandl.lft	f_code	DB080	Depression
7	misobsl.lft	f_code	DB145	Miscellaneous Obstacle
8	misobsl.lft	txt	UNK	No entry present
9	obsline.lft	f_code	DB010	Bluff/Cliff/Escarpment
10	obsline.lft	f_code	DB090	Embankment/Fill
11	obsline.lft	f_code	DB190	Volcanic Dike
12	obsline.lft	f_code	EA020	Hedgerow
13	misobsa.aft	f_code	DB145	Miscellaneous Obstacle
14	misobsa.aft	txt	UNK	No entry present
15	teetha.aft	f_code	AL060	Dragon Teeth
16	obsvoida.aft	f_code	ZD020	Void Collection Area
17	fca	type	A	Area Feature
18	fca	type	L	Line Feature

E.3.7.1 Obstacles coverage glossary.

AL060 Dragon Teeth (L,A) Regularly spaced concrete or metal barriers laid in single or multiple rows to prevent vehicle movement.
OHD Derived Obstacle Height/Depth Category (L,A) Categorized maximum height or depth of an obstacle feature, in meters, within delineated segment of area.
PFH Predominant Feature Height (decimeters) (L,A) Predominant height within delineation of feature.
WID Width (meters) (L) A measurement of the shorter of two linear axes. For a square feature, measure either axis. For a round feature, width shall be equal to LEN.

AL070 Fence (L) A manmade barrier of relatively light structure used as an enclosure or boundary. (See also AL260).
FTI Fence Type Indicator (L) Type of fence.
OHD Derived Obstacle Height/Depth Category (L) Categorized maximum height or depth of an obstacle feature, in meters, within delineated segment of area.
PFH Predominant Feature Height (decimeters) (L) Predominant height within delineation of feature.

AL260 Wall (L) A solid man made barrier of heavy material used as an enclosure or boundary or for protection.
MCC Material Composition Category (L) Characteristics of primary material composition of feature.
OHD Derived Obstacle Height/Depth Category (L) Categorized maximum height or depth of an obstacle feature, in meters, within delineated segment of area.
PFH Predominant Feature Height (decimeters) (L) Predominant height within delineation of feature.
WTI Wall Type Identifier (L) Type of wall structure category.

BH100 Moat (L) A trench usually filled with water, that surrounds a body of land.
HYC Hydrological Category (L) Identifies the annual water content of the feature.
OHD Derived Obstacle Height/Depth Category (L) Categorized maximum height or depth of an obstacle feature, in meters, within delineated segment of area.
PFD Predominant Feature Depth (decimeters) (L) Predominant depth within delineation of feature.
SGC Gradient/Slope (percent) (L) Percentage of Slope (i.e. The change in height divided by the horizontal distance over which the change takes place, times one hundred ((H2-h1)/d)*100).
WID Width (meters) (L) A measurement of the shorter of two linear axes. For a square feature, measure either axis. For a round feature, width shall be equal to LEN.

DB010 Bluff/Cliff/Escarpment (L) A steep, vertical, or overhanging face of rock or earth.
OHD Derived Obstacle Height/Depth Category (L) Categorized maximum height or depth of an obstacle feature, in meters, within delineated segment of area.
PFH Predominant Feature Height (decimeters) (L) Predominant height within delineation of feature.
SGC Gradient/Slope (percent) (L) Percentage of Slope (i.e. The change in height divided by the horizontal distance over which the change takes place, times one hundred ((H2-h1)/d)*100).

DB070 Cut (L) An excavation of Earth's surface to provide passage for a road, railroad, canal, etc.
OHD Derived Obstacle Height/Depth Category (L) Categorized maximum height or depth of an obstacle feature, in meters, within delineated segment of area.
PFD Predominant Feature Depth (decimeters) (L) Predominant depth within delineation of feature.
SGC Gradient/Slope (percent) (L) Percentage of Slope (i.e. The change in height divided by the horizontal distance over which the change takes place, times one hundred ((H2-h1)/d)*100).

DB080 Depression (L) A low area surrounded by higher ground.
OHD Derived Obstacle Height/Depth Category (L) Categorized maximum height or depth of an obstacle feature, in meters, within delineated segment of area.
PFD Predominant Feature Depth (decimeters) (L) Predominant depth within delineation of feature.
SGC Gradient/Slope (percent) (L) Percentage of Slope (i.e. The change in height divided by the horizontal distance over which the change takes place, times one hundred ((H2-h1)/d)*100).

DB090 Embankment/Fill (L) A raised long mound of earth or other material.
OHD Derived Obstacle Height/Depth Category (L) Categorized maximum height or depth of an obstacle feature, in meters, within delineated segment of area.
PFH Predominant Feature Height (decimeters) (L) Predominant height within delineation of feature.
SGC Gradient/Slope (percent) (L) Percentage of Slope (i.e. The change in height divided by the horizontal distance over which the change takes place, times one hundred ((H2-h1)/d)*100).
USE Usage (L) Use (Identifies the primary user, function, or controlling authority).

DB145 Miscellaneous Obstacle (L,A) Obstacle feature which is of a minor nature and which is not covered by other feature codings in this specification.
OHD Derived Obstacle Height/Depth Category (L,A) Categorized maximum height or depth of an obstacle feature, in meters, within delineated segment of area.
PFD Predominant Feature Depth (decimeters) (L,A) Predominant depth within delineation of feature.
PFH Predominant Feature Height (decimeters) (L,A) Predominant height within delineation of feature.
SGC Gradient/Slope (percent) (L,A) Percentage of Slope (i.e. The change in height divided by the horizontal distance over which the change takes place, times one hundred ((H2-h1)/d)*100).
TXT Text Attribute (L,A) Narrative or other description.

DB190 Volcanic Dike (L) A steep ridge of igneous rock.
OHD Derived Obstacle Height/Depth Category (L) Categorized maximum height or depth of an obstacle feature, in meters, within delineated segment of area.
PFH Predominant Feature Height (decimeters) (L) Predominant height within delineation of feature.
SGC Gradient/Slope (percent) (L) Percentage of Slope (i.e. The change in height divided by the horizontal distance over which the change takes place, times one hundred ((H2-h1)/d)*100).

EA020 Hedgerow (L) A continuous growth of shrubbery planted as a fence, a boundary, or a wind break.
OHD Derived Obstacle Height/Depth Category (L) Categorized maximum height or depth of an obstacle feature, in meters, within delineated segment of area.
PFH Predominant Feature Height (decimeters) (L) Predominant height within delineation of feature.

ZD020 Void Collection Area (A) An area lacking suitable source coverage, or where data is not required.
VCA Void Collection Attribute (A) Reason data is not collected.

TABLE E-108. Obstacles Integer Value Description Table.

Thematic Layer: Obstacles
Coverage Name: obs
Feature Table Description: Obstacles Integer Value Description Table
Table Name: int.vdt
DQ Layer Number: 5

{Header length}L;
Obstacles Integer Value Description Table;-;
id=I,1,P,Row Identifier,-,-,-,:
table=T,12,N,Name of the Feature Table,-,-,-,:
attribute=T,3,N,Column Name,-,-,-,:
value=S,1,N,Unique Value of Attribute,-,-,-,:
description=T,*,N,Description of Value,-,-,-,:;

1	obsmanl.lft	ohd	0	Unknown
2	obsmanl.lft	ohd	1	> 1.5 and <= 5.0
3	obsmanl.lft	ohd	2	> 5.0 and <= 10.0
4	obsmanl.lft	ohd	3	> 10.0 and <= 20.0
5	obsmanl.lft	ohd	4	> 20.0 and <= 40.0
6	obsmanl.lft	ohd	5	> 40.0
7	obsmanl.lft	fti	0	Unknown
8	obsmanl.lft	fti	1	Metal
9	obsmanl.lft	fti	2	Wood
10	obsmanl.lft	fti	3	Stone
11	obsmanl.lft	fti	5	Barbed Wire
12	obsmanl.lft	fti	6	Chain Link
13	obsmanl.lft	fti	999	Other
14	obsmanl.lft	mcc	0	Unknown
15	obsmanl.lft	mcc	9	Brick
16	obsmanl.lft	mcc	21	Concrete
17	obsmanl.lft	mcc	108	Stone
18	obsmanl.lft	mcc	999	Other
19	obsmanl.lft	pfh	0	Unknown
20	obsmanl.lft	wid	0	Unknown
21	obsmanl.lft	wti	0	Unknown
22	obsmanl.lft	wti	1	Standing
23	obsmanl.lft	wti	2	Retaining
24	obsmanl.lft	wti	999	Other
25	obsmandl.lft	ohd	0	Unknown
26	obsmandl.lft	ohd	1	> 1.5 and <= 5.0
27	obsmandl.lft	ohd	2	> 5.0 and <= 10.0
28	obsmandl.lft	ohd	3	> 10.0 and <= 20.0
29	obsmandl.lft	ohd	4	> 20.0 and <= 40.0
30	obsmandl.lft	ohd	5	> 40.0
31	obsmandl.lft	hyc	0	Unknown
32	obsmandl.lft	hyc	3	Dry
33	obsmandl.lft	hyc	8	Perennial/Permanent
34	obsmandl.lft	pfd	0	Unknown
35	obsmandl.lft	sgc	999	Unknown
36	obsmandl.lft	wid	0	Unknown
37	misobsl.lft	ohd	0	Unknown

TABLE E-108. Obstacles Integer Value Description Table (Continued).

38	misobsl.lft	ohd	1	> 1.5 and <= 5.0
39	misobsl.lft	ohd	2	> 5.0 and <= 10.0
40	misobsl.lft	ohd	3	> 10.0 and <= 20.0
41	misobsl.lft	ohd	4	> 20.0 and <= 40.0
42	misobsl.lft	ohd	5	> 40.0
43	misobsl.lft	pfd	0	Unknown
44	misobsl.lft	pfh	0	Unknown
45	misobsl.lft	sgc	999	Unknown
46	obsline.lft	ohd	0	Unknown
47	obsline.lft	ohd	1	> 1.5 and <= 5.0
48	obsline.lft	ohd	2	> 5.0 and <= 10.0
49	obsline.lft	ohd	3	> 10.0 and <= 20.0
50	obsline.lft	ohd	4	> 20.0 and <= 40.0
51	obsline.lft	ohd	5	> 40.0
52	obsline.lft	pfh	0	Unknown
53	obsline.lft	sgc	999	Unknown
54	obsline.lft	use	0	Unknown
55	obsline.lft	use	69	Levee/Dike
56	obsline.lft	use	127	as a Causeway
57	obsline.lft	use	139	Fill
58	obsline.lft	use	999	Other
59	misobsa.aft	ohd	0	Unknown
60	misobsa.aft	ohd	1	> 1.5 and <= 5.0
61	misobsa.aft	ohd	2	> 5.0 and <= 10.0
62	misobsa.aft	ohd	3	> 10.0 and <= 20.0
63	misobsa.aft	ohd	4	> 20.0 and <= 40.0
64	misobsa.aft	ohd	5	> 40.0
65	misobsa.aft	pfd	0	Unknown
66	misobsa.aft	pfh	0	Unknown
67	misobsa.aft	sgc	999	Unknown
68	obsvoida.aft	vca	0	Unknown
69	obsvoida.aft	vca	2	Area Too Rough to Collect
70	obsvoida.aft	vca	3	No Available Imagery
71	obsvoida.aft	vca	6	No Available Map Source
72	obsvoida.aft	vca	7	No Suitable Imagery
73	teetha.aft	ohd	0	Unknown
74	teetha.aft	ohd	1	> 1.5 and <= 5.0
75	teetha.aft	ohd	2	> 5.0 and <= 10.0
76	teetha.aft	ohd	3	> 10.0 and <= 20.0
77	teetha.aft	ohd	4	> 20.0 and <= 40.0
78	teetha.aft	ohd	5	> 40.0
79	teetha.aft	pfh	0	Unknown

E.3.8 Physiography coverage

TABLE E-109. Content and format for Physiography coverage feature class schema table.

Thematic Layer: Physiography
Coverage Name: phys
Feature Table Description: Physiography Feature Class Schema Table
Table Name: fcs
DQ Layer Number: 6

```
{Header length}L;
Physiography Feature Class Schema Table;-;
id=I,1,P,Row Identifier,-,-,-,:
feature_class=T,8,N,Name of Feature Class,-,-,-,:
table1=T,12,N,First Table,-,-,-,:
table1_key=T,16,N,Column Name in First Table,-,-,-,:
table2=T,12,N,Second Table,-,-,-,:
table2_key=T,16,N,Column Name in Second Table,-,-,-,:;
```

1	cavep	cavep.pft	end_id	end	id
2	cavep	end	id	cavep.pft	end_id
3	lndfrmp	lndfrmp.pft	end_id	end	id
4	lndfrmp	end	id	lndfrmp.pft	end_id
5	thermalp	thermalp.pft	end_id	end	id
6	thermalp	end	id	thermalp.pft	end_id
7	lndfrml	lndfrml.lft	id	lndfrml.ljt	lndfrml.lft_id
8	lndfrml	lndfrml.ljt	edg_id	edg	id
9	lndfrml	edg	id	lndfrml.ljt	edg_id
10	lndfrml	lndfrml.ljt	lndfrml.lft_id	lndfrml.lft	id
11	asphalta	asphalta.aft	id	asphalta.ajt	asphalta.aft_id
12	asphalta	asphalta.ajt	fac_id	fac	id
13	asphalta	fac	id	asphalta.ajt	fac_id
14	asphalta	asphalta.ajt	asphalta.aft_id	asphalta.aft	id
15	landicea	landicea.aft	id	landicea.ajt	landicea.aft_id
16	landicea	landicea.ajt	fac_id	fac	id
17	landicea	fac	id	landicea.ajt	fac_id
18	landicea	landicea.ajt	landicea.aft_id	landicea.aft	id
19	lndfrm1a	lndfrm1a.aft	id	lndfrm1a.ajt	lndfrm1a.aft_id
20	lndfrm1a	lndfrm1a.ajt	fac_id	fac	id
21	lndfrm1a	fac	id	lndfrm1a.ajt	fac_id
22	lndfrm1a	lndfrm1a.ajt	lndfrm1a.aft_id	lndfrm1a.aft	id
23	lndfrm2a	lndfrm2a.aft	id	lndfrm2a.ajt	lndfrm2a.aft_id
24	lndfrm2a	lndfrm2a.ajt	fac_id	fac	id
25	lndfrm2a	fac	id	lndfrm2a.ajt	fac_id
26	lndfrm2a	lndfrm2a.ajt	lndfrm2a.aft_id	lndfrm2a.aft	id
27	phyvoida	phyvoida.aft	id	phyvoida.ajt	phyvoida.aft_id
28	phyvoida	phyvoida.ajt	fac_id	fac	id
29	phyvoida	fac	id	phyvoida.ajt	fac_id
30	phyvoida	phyvoida.ajt	phyvoida.aft_id	phyvoida.aft	id
31	seaicea	seaicea.aft	id	seaicea.ajt	seaicea.aft_id
32	seaicea	seaicea.ajt	fac_id	fac	id

TABLE E-109. Content and format for Physiography coverage feature class schema table (Continued).

33	seaicea	fac	id	seaicea.ajt	fac_id
34	seaicea	seaicea.ajt	seaicea.aft_id	seaicea.aft	id
35	phystxt	phystxt.tft	txt_id	txt	id
36	phystxt	txt	id	phystxt.tft	txt_id

TABLE E-110. Cave Point Feature Table.

Thematic Layer: Physiography
Coverage Name: phys
Feature Table Description: Cave Point Feature Table
Table Name: cavep.pft
DQ Layer Number: 6
Portrayal Criteria:

```
{Header length}L;
Cave Point Feature Table;-;
id=I,1,P,Row Identifier,-,-,-,:
f_code=T,5,N,FACC Feature Code,char.vdt,-,-,:
nam=T,*,N,Name,char.vdt,-,-,:
tile_id=S,1,N,Tile Reference ID,-,tile1_id.pti,-,:
end_id=I,1,N,Entity Node Primitive ID,-,end1_id.pti,-,:;
```

Column	Description	Value	Value Meaning	Applicable f_code for Each Attribute Value
id	Row Identifier	Sequential beginning with 1		
f_code	FACC Feature Code			
		DB030	Cave	
nam	Name			
		Character text string		DB030
		UNK (No entry present)		DB030

TABLE E-111. Landform Point Feature Table.

Thematic Layer: Physiography
Coverage Name: phys
Feature Table Description: Landform Point Feature Table
Table Name: lndfrmp.pft
DQ Layer Number: 6
Portrayal Criteria: For BJ060 must be landmark and height > 40 meters. For DB160 must be landmark and height >= 40 meters.

```
{Header length}L;
Landform Point Feature Table;-;
id=I,1,P,Row Identifier,-,-,-,:
f_code=T,5,N,FACC Feature Code,char.vdt,f_code2.pti,-,:
hgt=S,1,N,Height Above Surface Level (meters),int.vdt,-,-,:
mcc=S,1,N,Material Composition Category,int.vdt,-,-,:
rkf=S,1,N,Rock Strata Formation,int.vdt,-,-,:
tile_id=S,1,N,Tile Reference ID,-,tile2_id.pti,-,:
end_id=I,1,N,Entity Node Primitive ID,-,end2_id.pti,-,:;
```

Column	Description	Value	Value Meaning	Applicable f_code for Each Attribute Value
id	Row Identifier	Sequential beginning with 1		
f_code	FACC Feature Code			
		BJ060	Ice Peak/Nunatak	
		DB160	Rock Strata/Rock Formation	
hgt	Height Above Surface Level (meters)			
		0	Unknown	BJ060,DB160
		> 40		BJ060
		>=40		DB160
mcc	Material Composition Category			
		-32768	Null	DB160
		0	Unknown	BJ060
		84	Rock/Rocky	BJ060
		103	Snow/Ice	BJ060
rkf	Rock Strata Formation			
		-32768	Null	BJ060
		0	Unknown	DB160
		3	Pinnacle	DB160

TABLE E-112. Thermal Point Feature Table.

Thematic Layer: Physiography
Coverage Name: phys
Feature Table Description: Thermal Point Feature Table
Table Name: thermalp.pft
DQ Layer Number: 6
Portrayal Criteria: DB115 must be a landmark feature.

```
{Header length}L;
Thermal Point Feature Table;-;
id=I,1,P,Row Identifier,-,-,-,:
f_code=T,5,N,FACC Feature Code,char.vdt,f_code3.pti,-,:
hgt=S,1,N,Height Above Surface Level (meters),int.vdt,-,-,:
loc=S,1,N,Location Category,int.vdt,-,-,:
swt=S,1,N,Well/Spring Type,int.vdt,-,-,:
tile_id=S,1,N,Tile Reference ID,-,tile3_id.pti,-,:
end_id=I,1,N,Entity Node Primitive ID,-,end3_id.pti,-,:;
```

Column	Description	Value	Value Meaning	Applicable f_code for Each Attribute Value
id	Row Identifier	Sequential beginning with 1		
f_code	FACC Feature Code			
		DB115	Geothermal Feature	
		DB180	Volcano	
hgt	Height Above Surface Level (meters)			
		-32768	Null	DB115
		0	Unknown	DB180
		>0		DB180
loc	Location Category			
		-32768	Null	DB115
		0	Unknown	DB180
		8	On Ground Surface	DB180
swt	Well/Spring Type			
		-32768	Null	DB180
		0	Unknown	DB115
		1	Geyser	DB115
		2	Hot Spring	DB115
		3	Fumarole	DB115

TABLE E-113. Landform Line Join Table.

(This table is used to combine linear physiographic features with their associated edge primitives in a one-to-many relationship.)

```
{Header length}L;
Landform Line Join Table;-;
id=I,1,P,Row Identifier,-,-,-,:
lndfrml.lft_id=I,1,N,Feature Key,-,lndfrml.jti,-,:
tile_id=S,1,N,Tile Reference ID,-,tile1_id.jti,-,:
edg_id=I,1,N,Edge Primitive ID,-,edg1_id.jti,-,:;
```

TABLE E-114. Landform Line Feature Table.

Thematic Layer: Physiography
Coverage Name: phys
Feature Table Description: Landform Line Feature Table
Table Name: lndfrml.lft
DQ Layer Number: 6
Portrayal Criteria: For BJ040 length >= 420 meters, for DB060 length >= 420 meters and width < 50 meters, for DB100 length >= 75 meters and landmark feature, and for DB110 length >= 125 meters.

```
{Header length}L;
Landform Line Feature Table;-;
id=I,1,P,Row Identifier,-,-,-,:
f_code=T,5,N,FACC Feature Code,char.vdt,f_code1.lti,-,:
mcc=S,1,N,Material Composition Category,int.vdt,-,-,:
nam=T,*,N,Name,char.vdt,-,-,:
wid=S,1,N,Width (meters),int.vdt,-,-,:;
```

Column	Description	Value	Value Meaning	Applicable f_code for Each Attribute Value
id	Row Identifier	Sequential beginning with 1		
f_code	FACC Feature Code			
		BJ040	Ice Cliff	
		DB060	Crevice/Crevasse	
		DB100	Esker	
		DB110	Fault	
mcc	Material Composition Category			
		-32768	Null	BJ040,DB100,DB110
		0	Unknown	DB060
		30	Earthen	DB060
		103	Snow/Ice	DB060
nam	Name			
	Variable length text			
	= zero-length		Null	BJ040,DB060,DB100
		Character text string		DB110
		UNK (No entry present)		DB110

TABLE E-114. Landform Line Feature Table (Continued).

wid	Width (meters)			
		-32768	Null	BJ040,DB100,DB110
		0	Unknown	DB060
		> 25 and < 50		DB060

TABLE E-115. Asphalt Area Join Table.

(This table is used to combine area physiographic features with their associated face primitives in a one-to-many relationship.)

```
{Header length}L;
Asphalt Area Join Table;-;
id=I,1,P,Row Identifier,-,-,-,:
asphalta.aft_id=I,1,N,Feature Key,-,asphalta.jti,-,:
tile_id=S,1,N,Tile Reference ID,-,tile2_id.jti,-,:
fac_id=I,1,N,Face Primitive ID,-,fac2_id.jti,-,:;
```

TABLE E-116. Asphalt Area Feature Table.

Thematic Layer:	Physiography
Coverage Name:	phys
Feature Table Description:	Asphalt Area Feature Table
Table Name:	asphalta.aft
DQ Layer Number:	5
Portrayal Criteria:	For DA005 area >= 15,625 square meters.

```
{Header length}L;
Asphalt Area Feature Table;-;
id=I,1,P,Row Identifier,-,-,-,:
f_code=T,5,N,FACC Feature Code,char.vdt,-,-,:;
```

Column	**Description**	**Value**	**Value Meaning**	**Applicable f_code for Each Attribute Value**
id	Row Identifier	Sequential beginning with 1		
f_code	FACC Feature Code			
		DA005	Asphalt Lake	

TABLE E-117. Land Ice Area Join Table.

(This table is used to combine area physiographic features with their associated face primitives in a one-to-many relationship.)

```
{Header length}L;
Land Ice Area Join Table;-;
id=I,1,P,Row Identifier,-,-,-,:
landicea.aft_id=I,1,N,Feature Key,-,landicea.jti,-,:
tile_id=S,1,N,Tile Reference ID,-,tile3_id.jti,-,:
fac_id=I,1,N,Face Primitive ID,-,fac3_id.jti,-,:;
```

TABLE E-118. Land Ice Area Feature Table.

Thematic Layer: Physiography
Coverage Name: phys
Feature Table Description: Land Ice Area Feature Table
Table Name: landicea.aft
DQ Layer Number: 6
Portrayal Criteria: For BJ030 and BJ100 area >= 176,400 square meters.

```
{Header length}L;
Land Ice Area Feature Table;-;
id=I,1,P,Row Identifier,-,-,-,:
f_code=T,5,N,FACC Feature Code,char.vdt,f_code3.ati,-,:
sic=S,1,N,Snow/Ice Category,int.vdt,-,-,:;
```

Column	Description	Value	Value Meaning	Applicable f_code for Each Attribute Value
id	Row Identifier	Sequential beginning with 1		
f_code	FACC Feature Code			
		BJ030	Glacier	
		BJ100	Snow Field/Ice Field	
sic	Snow/Ice Category			
		-32768	Null	BJ030
		0	Unknown	BJ100
		1	Snow	BJ100
		2	Ice	BJ100

TABLE E-119. Landform 1 Area Join Table.

(This table is used to combine area physiographic features with their associated face primitives in a one-to-many relationship.)

```
{Header length}L;
Landform 1 Area Join Table;-;
id=I,1,P,Row Identifier,-,-,-,:
lndfrm1a.aft_id=I,1,N,Feature Key,-,lndfrm1a.jti,-,:
tile_id=S,1,N,Tile Reference ID,-,tile4_id.jti,-,:
fac_id=I,1,N,Face Primitive ID,-,fac4_id.jti,-,:;
```

TABLE E-120. Landform 1 Area Feature Table.

Thematic Layer: Physiography
Coverage Name: phys
Feature Table Description: Landform 1 Area Feature Table
Table Name: lndfrm1a.aft
DQ Layer Number: 6
Portrayal Criteria: For BH160 and BH150 area >= 15,625 square meters, for DB170 area >= 176,400 square meters.

```
{Header length}L;
Landform 1 Area Feature Table;-;
id=I,1,P,Row Identifier,-,-,-,:
f_code=T,5,N,FACC Feature
Code,char.vdt,f_code4.ati,-,:
feo=S,1,N,Feature Element Orientation
(degrees),int.vdt,-,-,:
ssc=S,1,N,Structure Shape Category,int.vdt,-,-,:;
```

Column	Description	Value	Value Meaning	Applicable f_code for Each Attribute Value
id	Row Identifier	Sequential beginning with 1		
f_code	FACC Feature Code			
		BH150	Salt Pan	
		BH160	Sebkha	
		DB170	Sand Dune/Sand Hills	
feo	Feature Element Orientation (degrees)			
		-32768	Null	BH150,BH160
		999	Unknown	DB170
		0 to 359		DB170
ssc	Structure Shape Category			
		-32768	Null	BH150,BH160
		0	Unknown	DB170
		22	Crescent	DB170
		26	Lateral	DB170
		27	Mounds	DB170
		28	Ripple	DB170
		29	Star	DB170
		30	Transverse	DB170

TABLE 121. Landform 2 Area Join Table.

(This table is used to combine area physiographic features with their associated face primitives in a one-to-many relationship.)

```
{Header length}L;
Landform 2 Area Join Table;-;
id=I,1,P,Row Identifier,-,-,-,:
lndfrm2a.aft_id=I,1,N,Feature Key,-,lndfrm2a.jti,-,:
tile_id=S,1,N,Tile Reference ID,-,tile5_id.jti,-,:
fac_id=I,1,N,Face Primitive ID,-,fac5_id.jti,-,:;
```

TABLE E-122. Landform 2 Area Feature Table.

Thematic Layer: Physiography
Coverage Name: phys
Feature Table Description: Landform 2 Area Feature Table
Table Name: lndfrm2a.aft
DQ Layer Number: 6
Portrayal Criteria: For DB060 length >= 420 meters and width >= 50 meters. For BJ020 width >= 320 meters. For DB160 height >= 40 meters or landmark.

```
{Header length}L;
Landform 2 Area Feature Table;-;
id=I,1,P,Row Identifier,-,-,-,:
f_code=T,5,N,FACC Feature Code,char.vdt,f_code5.ati,-,:
hgt=S,1,N,Height Above Surface Level (meters),int.vdt,-,-,:
mcc=S,1,N,Material Composition Category,int.vdt,-,-,:
rkf=S,1,N,Rock Strata Formation,int.vdt,-,-,:;
```

Column	Description	Value	Value Meaning	Applicable f_code for Each Attribute Value
id	Row Identifier	Sequential beginning with 1		
f_code	FACC Feature Code			
		BJ020	Moraine	
		DB060	Crevice/Crevasse	
		DB160	Rock Strata/Rock Formation	
hgt	Height Above Surface Level (meters)			
		-32768	Null	BJ020,DB060
		0	Unknown	DB160
		>0		DB160
mcc	Material Composition Category			
		-32768	Null	BJ020,DB160
		0	Unknown	DB060
		30	Earthen	DB060
		103	Snow/Ice	DB060
rkf	Rock Strata Formation			
		-32768	Null	BJ020,DB060
		0	Unknown	DB160
		1	Columnar	DB160

TABLE E-123. Sea Ice Area Join Table.

(This table is used to combine area physiographic features with their associated face primitives in a one-to-many relationship.)

```
{Header length}L;
Sea Ice Area Join Table;-;
id=I,1,P,Row Identifier,-,-,-,:
seaicea.aft_id=I,1,N,Feature Key,-,seaicea.jti,-,:
tile_id=S,1,N,Tile Reference ID,-,tile6_id.jti,-,:
fac_id=I,1,N,Face Primitive ID,-,fac6_id.jti,-,:;
```

TABLE E-124. Sea Ice Area Feature Table.

Thematic Layer: Physiography
Coverage Name: phys
Feature Table Description: Sea Ice Area Feature Table
Table Name: seaicea.aft
DQ Layer Number: 6
Portrayal Criteria: For BJ065 area >= 15,625 square meters, for BJ070 and BJ080 area >= 176,400 square meters.

```
{Header length}L;
Sea Ice Area Feature Table;-;
id=I,1,P,Row Identifier,-,-,-,:
f_code=T,5,N,FACC Feature Code,char.vdt,f_code6.ati,-,:
prc=S,1,N,Periodic Restriction Category,int.vdt,-,-,:;
```

Column	Description	Value	Value Meaning	Applicable f_code for Each Attribute Value
id	Row Identifier	Sequential beginning with 1		
f_code	FACC Feature Code			
		BJ065	Ice Shelf	
		BJ070	Pack Ice	
		BJ080	Polar Ice	
prc	Periodic Restriction Category			
		-32768	Null	BJ065
		0	Unknown	BJ070,BJ080
		3	Permanent Ice	BJ070,BJ080
		4	Seasonal limit–Jan.	BJ070,BJ080
		5	Seasonal limit–Feb.	BJ070,BJ080
		6	Seasonal limit–Mar.	BJ070,BJ080
		7	Seasonal limit–Apr.	BJ070,BJ080
		8	Seasonal limit–May	BJ070,BJ080
		9	Seasonal limit–Jun.	BJ070,BJ080
		10	Seasonal limit–Jul.	BJ070,BJ080
		11	Seasonal limit–Aug.	BJ070,BJ080
		12	Seasonal limit–Sep.	BJ070,BJ080
		13	Seasonal limit–Oct.	BJ070,BJ080
		14	Seasonal limit–Nov.	BJ070,BJ080
		15	Seasonal limit–Dec.	BJ070,BJ080

TABLE E-125. Physiography Void Collection Area Join Table.
(This table is used to combine area physiographic features with their associated face primitives in a one-to-many relationship.)

```
{Header length}L;
Physiography Void Collection Area Join Table;-;
id=I,1,P,Row Identifier,-,-,-,:
phyvoida.aft_id=I,1,N,Feature Key,-,phyvoida.jti,-,:
tile_id=S,1,N,Tile Reference ID,-,tile7_id.jti,-,:
fac_id=I,1,N,Face Primitive ID,-,fac7_id.jti,-,:;
```

TABLE E-126. Physiography Void Collection Area Feature Table.

Thematic Layer:	Physiography
Coverage Name:	phys
Feature Table Description:	Physiography Void Collection Area Feature Table
Table Name:	phyvoida.aft
DQ Layer Number:	6
Portrayal Criteria:	For ZD020 area >=15,625 square meters.

```
{Header length}L;
Physiography Void Collection Area Feature Table;-;
id=I,1,P,Row Identifier,-,-,-,:
f_code=T,5,N,FACC Feature Code,char.vdt,-,-,:
vca=S,1,N,Void Collection Attribute,int.vdt,-,-,:;
```

Column	Description	Value	Value Meaning	Applicable f_code for Each Attribute Value
id	Row Identifier	Sequential beginning with 1		
f_code	FACC Feature Code			
		ZD020	Void Collection Area	
vca	Void Collection Attribute			
		0	Unknown	ZD020
		2	Area Too Rough to Collect	ZD020
		3	No Available Imagery	ZD020
		6	No Available Map Source	ZD020
		7	No Suitable Imagery	ZD020

TABLE E-127. Physiography Text Feature Table.

Thematic Layer:	Physiography
Coverage Name:	phys
Feature Table Description:	Physiography Text Feature Table
Table Name:	phystxt.tft
DQ Layer Number:	6

```
{Header length}L;
Physiography Text Feature Table;-;
id=I,1,P,Row Identifier,-,-,-,:
f_code=T,5,N,FACC Feature Code,char.vdt,f_code.tti,-
,:
tile_id=S,1,N,Tile Reference ID,-,tile_id.tti,-,:
txt_id=I,1,N,Text Primitive ID,-,txt_id.tti,-,:;
```

Column	**Description**	**Value**	**Value Meaning**	**Applicable F_CODE for Each Attribute Value**
id	Row Identifier	Sequential beginning with 1		
f_code	FACC Feature Code			
		ZD040	Named Location	
		ZD045	Text Description	

TABLE E-128. Physiography Feature Class Attribute Table.

Thematic Layer: Physiography
Coverage Name: phys
Table Description: Physiography Feature Class Attribute Table
Table Name: fca
DQ Layer Number: 6

```
{Header length}L;
Physiography Feature Class Attribute Table;-;
id=I,1,P,Row Identifier,-,-,-,:
fclass=T,8,U,Feature Class Name,-,-,-,:
type=T,1,N,Feature Type,char.vdt,-,-,:
descr=T,*,N,Description,-,-,-,:;
```

Column	Description	Value	Value Meaning	Applicable Feature Class for Each Attribute Value
id	Row Identifier	Sequential beginning with 1		
fclass	Feature Class Name			
		cavep		
		lndfrmp		
		thermalp		
		lndfrml		
		asphalta		
		landicea		
		lndfrm1a		
		lndfrm2a		
		phyvoida		
		seaicea		
		phystxt		
type	Feature Type			
		P	Point/Node Feature	cavep, lndfrmp, thermalp
		L	Line Feature	lndfrml
		A	Area Feature	asphalta, landicea, lndfrm1a, lndfrm2a, phyvoida, seaicea
		T	Text Feature	phystxt

TABLE E-128. Physiography Feature Class Attribute Table (Continued).

descr	Description		
		Landform Point Features	lndfrmp
		Cave	cavep
		Geothermal Features	thermalp
		Landform Line Features	lndfrml
		Asphalt Lakes	asphalta
		Glaciers and Snow/Ice Fields	landicea
		Salt Pans,	Sebkhas,
		Sand Dune/Hills	lndfrm1a
		Moraines	lndfrm2a
		Physiography Void Collection Areas	phyvoida
		Ice Shelf, Polar Ice, Pack Ice Areas	seaicea
		Physiography Coverage Text	phystxt

TABLE E-129. Physiography Character Value Description Table.

Thematic Layer: Physiography
Coverage Name: phys
Feature Table Description: Physiography Character Value Description Table
Table Name: char.vdt
DQ Layer Number: 6

{Header length}L;
Physiography Character Value Description Table;-;
id=I,1,P,Row Identifier,-,-,-,:
table=T,12,N,Name of the Feature Table,-,-,-,:
attribute=T,6,N,Column Name,-,-,-,:
value=T,5,N,Unique Value of Attribute,-,-,-,:
description=T,*,N,Description of Value,-,-,-,:;

1	cave.pft	f_code	DB030	Cave
2	cave.pft	nam	UNK	No entry present
3	lndfrmp.pft	f_code	BJ060	Ice Peak/Nunatak
4	lndfrmp.pft	f_code	DB160	Rock Strata/Rock Formation
5	thermalp.pft	f_code	DB115	Geothermal Feature
6	thermalp.pft	f_code	DB180	Volcano
7	lndfrml.lft	f_code	BJ040	Ice Cliff
8	lndfrml.lft	f_code	DB060	Crevice/Crevasse
9	lndfrml.lft	f_code	DB100	Esker
10	lndfrml.lft	f_code	DB110	Fault
11	lndfrml.lft	nam	UNK	No entry present
12	asphalta.aft	f_code	DA005	Asphalt Lake
13	landicea.aft	f_code	BJ030	Glacier
14	landicea.aft	f_code	BJ100	Snow Field/Ice Field
15	lndfrm1a.aft	f_code	BH150	Salt Pan
16	lndfrm1a.aft	f_code	BH160	Sebkha
17	lndfrm1a.aft	f_code	DB170	Sand Dune/Sand Hills
18	lndfrm2a.aft	f_code	BJ020	Moraine
19	lndfrm2a.aft	f_code	DB060	Crevice/Crevasse
20	lndfrm2a.aft	f_code	DB160	Rock Strata/Rock Formation
21	phyvoida.aft	f_code	ZD020	Void Collection Area
22	seaicea.aft	f_code	BJ065	Ice Shelf
23	seaicea.aft	f_code	BJ070	Pack Ice
24	seaicea.aft	f_code	BJ080	Polar Ice
25	phystxt.tft	f_code	ZD040	Named Location
26	phystxt.tft	f_code	ZD045	Text Description
27	fca	type	A	Area Feature
28	fca	type	L	Line Feature
29	fca	type	P	Point/Node Feature
30	fca	type	T	Text Feature

E.3.8.1 Physiography coverage glossary.

BH150 Salt Pan (A) A flat area of natural surface salt deposits.

BH160 Sebkha (A) A natural depression in arid or semi-arid regions whose bed is covered with salt encrusted clayey soil.

BJ020 Moraine (A) An accumulation of soil and stone debris deposited by a glacier.

BJ030 Glacier (A) A large mass of snow and ice moving slowly down a slope or valley from above the snowline.

BJ040 Ice Cliff (L) The vertical face of a glacier or ice shelf.

BJ060 Ice Peak/Nunatak (P) A rocky peak projecting above a surrounding ice field that may be perpetually covered with ice.
HGT Height Above Surface Level (meters) (P) Distance measured from the lowest point of the base at ground or water level (downhill side/downstream side) to the tallest point of the feature.
MCC Material Composition Category (P) Characteristics of primary material composition of feature.

BJ065 Ice Shelf (A) A sheet of thick ice, with level or undulating surface, attached to the land but mostly afloat which is bounded on the seaward side by an ice cliff (BJ040).

BJ070 Pack Ice (A) An area of ice formed by the drifting and crushing together of floating pieces of ice.
PRC Periodic Restriction Category (A) Restriction due to climate or other limitations.

BJ080 Polar Ice (A) The heaviest, thickest form of ice over land or water.
PRC Periodic Restriction Category (A) Restriction due to climate or other limitations.

BJ100 Snow Field/Ice Field (A) A large area permanently covered by snow or ice over land or water.
SIC Snow/Ice Category (A) Indicates the composition of the feature.

DA005 Asphalt Lake (A) A natural pool of liquid asphalt.

DB030 Cave (P) A natural subterranean chamber or series of chambers open to the earth's surface.
NAM Name (P) Any Identifier or code.

DB060 Crevice/Crevasse (L,A) A narrow fissure, crack, or rift in the Earth's surface, snow, or ice.
MCC Material Composition Category (L,A) Characteristics of primary material composition of feature.
WID Width (meters) (L) A measurement of the shorter of two linear axes. For a square feature, measure either axis.

DB100 Esker (L) A long, narrow ridge of sand and gravel deposited by a glacial stream.

DB110 Fault (L) A fracture in the Earth's crust with displacement on one side of the fracture relative to the other. (See also DB010).
NAM Name (L) Any Identifier or code.

DB115 Geothermal Feature (P) A terrain surface feature controlled by or derived from heat of the earth's interior.
SWT Well/Spring Type (P) Identifies the type of spring or water-hole.

DB160 Rock Strata/Rock Formation (P,A) A visual topographic outcrop, layers or beds of rock.
HGT Height Above Surface Level (meters) (P,A) Distance measured from the lowest point of the base at ground or water level (downhill side/downstream side) to the tallest point of the feature.
RKF Rock Strata Formation (P,A) The structure of a rock formation.

DB170 Sand Dune/Sand Hills (A) Ridges or hills of sand.
FEO Feature Element Orientation (degrees) (A) The angular distance measured from true north (0 dg) clockwise to the predominant linear pattern of elements within a feature.
SSC Structure Shape Category (A) Geometric form, appearance, or configuration of the feature.

DB180 Volcano (P) A mountain or hill, often conical, formed around a vent in the earth's crust through which molten rock, ash, or gases are or have been expelled.
HGT Height Above Surface Level (meters) (P) Distance measured from the lowest point of the base at ground or water level (downhill side/downstream side) to the tallest point of the feature.
LOC Location Category (P) Status of feature relative to surrounding area or water.

ZD020 Void Collection Area (A) An area lacking suitable source coverage, or where data is not required.
VCA Void Collection Attribute (A) Reason data is not collected.

ZD040 Named Location (T) A geographic place on earth, not normally appearing as a feature on a map, but having a name that is required to be placed on a map.

ZD045 Text Description (T) An area in which a characteristic or an activity pertaining to the area can be described and possibly is labeled on a product if deemed important at the time the product is being produced.

TABLE E-130. Physiography Integer Value Description Table.

Thematic Layer: Physiography
Coverage Name: phys
Feature Table Description: Physiography Integer Value Description Table
Table Name: int.vdt
DQ Layer Number: 6

{Header length}L;
Physiography Integer Value Description Table;-;
id=I,1,P,Row Identifier,-,-,-,:
table=T,12,N,Name of the Feature Table,-,-,-,:
attribute=T,3,N,Column Name,-,-,-,:
value=S,1,N,Unique Value of Attribute,-,-,-,:
description=T,*,N,Description of Value,-,-,-,:;

1	lndfrmp.pft	hgt	0	Unknown
2	lndfrmp.pft	mcc	0	Unknown
3	lndfrmp.pft	mcc	84	Rock/Rocky
4	lndfrmp.pft	mcc	103	Snow/Ice
5	lndfrmp.pft	rkf	0	Unknown
6	lndfrmp.pft	rkf	3	Pinnacle
7	thermalp.pft	hgt	0	Unknown
8	thermalp.pft	loc	0	Unknown
9	thermalp.pft	loc	8	On Ground Surface
10	thermalp.pft	swt	0	Unknown
11	thermalp.pft	swt	1	Geyser
12	thermalp.pft	swt	2	Hot Spring
13	thermalp.pft	swt	3	Fumarole
14	lndfrml.lft	mcc	0	Unknown
15	lndfrml.lft	mcc	30	Earthen
16	lndfrml.lft	mcc	103	Snow/Ice
17	lndfrml.lft	wid	0	Unknown
18	landicea.aft	sic	0	Unknown
19	landicea.aft	sic	1	Snow
20	landicea.aft	sic	2	Ice
21	lndfrm1a.aft	feo	999	Unknown
22	lndfrm1a.aft	ssc	0	Unknown
23	lndfrm1a.aft	ssc	22	Crescent
24	lndfrm1a.aft	ssc	26	Lateral
25	lndfrm1a.aft	ssc	27	Mounds
26	lndfrm1a.aft	ssc	28	Ripple
27	lndfrm1a.aft	ssc	29	Star
28	lndfrm1a.aft	ssc	30	Transverse
29	lndfrm2a.aft	hgt	0	Unknown
30	lndfrm2a.aft	mcc	0	Unknown
31	lndfrm2a.aft	mcc	30	Earthen
32	lndfrm2a.aft	mcc	103	Snow/Ice
33	lndfrm2a.aft	rkf	0	Unknown
34	lndfrm2a.aft	rkf	1	Columnar
35	phyvoida.aft	vca	0	Unknown
36	phyvoida.aft	vca	2	Area Too Rough to Collect
37	phyvoida.aft	vca	3	No Available Imagery

TABLE E-130. Physiography Integer Value Description Table (Continued).

38	phyvoida.aft	vca	6	No Available Map Source
39	phyvoida.aft	vca	7	No Suitable Imagery
40	seaicea.aft	prc	0	Unknown
41	seaicea.aft	prc	3	Permanent Ice
42	seaicea.aft	prc	4	Seasonal limit-Jan.
43	seaicea.aft	prc	5	Seasonal limit-Feb.
44	seaicea.aft	prc	6	Seasonal limit-Mar.
45	seaicea.aft	prc	7	Seasonal limit-Apr.
46	seaicea.aft	prc	8	Seasonal limit-May
47	seaicea.aft	prc	9	Seasonal limit-Jun.
48	seaicea.aft	prc	10	Seasonal limit-Jul.
49	seaicea.aft	prc	11	Seasonal limit-Aug.
50	seaicea.aft	prc	12	Seasonal limit-Sep.
51	seaicea.aft	prc	13	Seasonal limit-Oct.
52	seaicea.aft	prc	14	Seasonal limit-Nov.
53	seaicea.aft	prc	15	Seasonal limit-Dec.

E.3.9 Population coverage

TABLE E-131. Content and format for Population coverage feature class schema table.

Thematic Layer: Population
Coverage Name: pop
Feature Table Description: Population Feature Class Schema Table
Table Name: fcs
DQ Layer Number: 7

```
{Header length}L;
Population Feature Class Schema Table;-;
id=I,1,P,Row Identifier,-,-,-,:
feature_class=T,8,N,Name of Feature Class,-,-,-,:
table1=T,12,N,First Table,-,-,-,:
table1_key=T,16,N,Column Name in First Table,-,-,-,:
table2=T,12,N,Second Table,-,-,-,:
table2_key=T,16,N,Column Name in Second Table,-,-,-,:;
```

1	buildp	buildp.pft	end_id	end	id
2	buildp	end	id	buildp.pft	end_id
3	fortp	fortp.pft	end_id	end	id
4	fortp	end	id	fortp.pft	end_id
5	landmrkp	landmrkp.pft	end_id	end	id
6	landmrkp	end	id	landmrkp.pft	end_id
7	mispopp	mispopp.pft	end_id	end	id
8	mispopp	end	id	mispopp.pft	end_id
9	ruinsp	ruinsp.pft	end_id	end	id
10	ruinsp	end	id	ruinsp.pft	end_id
11	buildl	buildl.lft	id	buildl.ljt	buildl.lft_id
12	buildl	buildl.ljt	edg_id	edg	id
13	buildl	edg	id	buildl.ljt	edg_id
14	buildl	buildl.ljt	buildl.lft_id	buildl.lft	id
15	landmrkl	landmrkl.lft	id	landmrkl.ljt	landmrkl.lft_id
16	landmrkl	landmrkl.ljt	edg_id	edg	id
17	landmrkl	edg	id	landmrkl.ljt	edg_id
18	landmrkl	landmrkl.ljt	landmrkl.lft_id	landmrkl.lft	id
19	builda	builda.aft	id	builda.ajt	builda.aft_id
20	builda	builda.ajt	fac_id	fac	id
21	builda	fac	id	builda.ajt	fac_id
22	builda	builda.ajt	builda.aft_id	builda.aft	id
23	builtupa	builtupa.aft	id	builtupa.ajt	builtupa.aft_id
24	builtupa	builtupa.ajt	fac_id	fac	id
25	builtupa	fac	id	builtupa.ajt	fac_id
26	builtupa	builtupa.ajt	builtupa.aft_id	builtupa.aft	id
27	builtupa	builtupa.aft	id	builtupa.rjt	builtupa.aft_id
28	builtupa	builtupa.rjt	rat_id	builtupa.rat	id
29	builtupa	builtupa.rat	id	builtupa.rjt	rat_id
30	builtupa	builtupa.rjt	builtupa.aft_id	builtupa.aft	id
31	forta	forta.aft	id	forta.ajt	forta.aft_id
32	forta	forta.ajt	fac_id	fac	id

TABLE E-131. Content and format for Population coverage feature class schema table (Continued).

33	forta	fac	id	forta.ajt	fac_id
34	forta	forta.ajt	forta.aft_id	forta.aft	id
35	landmrka	landmrka.aft	id	landmrka.ajt	landmrka.aft_id
36	landmrka	landmrka.ajt	fac_id	fac	id
37	landmrka	fac	id	landmrka.ajt	fac_id
38	landmrka	landmrka.ajt	landmrka.aft_id	landmrka.aft	id
39	mobilea	mobilea.aft	id	mobilea.ajt	mobilea.aft_id
40	mobilea	mobilea.ajt	fac_id	fac	id
41	mobilea	fac	id	mobilea.ajt	fac_id
42	mobilea	mobilea.ajt	mobilea.aft_id	mobilea.aft	id
43	plazaa	plazaa.aft	id	plazaa.ajt	plazaa.aft_id
44	plazaa	plazaa.ajt	fac_id	fac	id
45	plazaa	fac	id	plazaa.ajt	fac_id
46	plazaa	plazaa.ajt	plazaa.aft_id	plazaa.aft	id
47	popvoida	popvoida.aft	id	popvoida.ajt	popvoida.aft_id
48	popvoida	popvoida.ajt	fac_id	fac	id
49	popvoida	fac	id	popvoida.ajt	fac_id
50	popvoida	popvoida.ajt	popvoida.aft_id	popvoida.aft	id
51	ruinsa	ruinsa.aft	id	ruinsa.ajt	ruinsa.aft_id
52	ruinsa	ruinsa.ajt	fac_id	fac	id
53	ruinsa	fac	id	ruinsa.ajt	fac_id
54	ruinsa	ruinsa.ajt	ruinsa.aft_id	ruinsa.aft	id
55	sporta	sporta.aft	id	sporta.ajt	sporta.aft_id
56	sporta	sporta.ajt	fac_id	fac	id
57	sporta	fac	id	sporta.ajt	fac_id
58	sporta	sporta.ajt	sporta.aft_id	sporta.aft	id
59	poptxt	poptxt.tft	txt_id	txt	id
60	poptxt	txt	id	poptxt.tft	txt_id

TABLE E-132. Buildings Point Feature Table.

Thematic Layer: Population
Coverage Name: pop
Feature Table Description: Buildings Point Feature Table
Table Name: buildp.pft
DQ Layer Number: 7
Portrayal Criteria: Collect if significant or prominent feature and length >= 3 and < 25 meters.

```
{Header length}L;
Buildings Point Feature Table;-;
id=I,1,P,Row Identifier,-,-,-,:
f_code=T,5,N,FACC Feature Code,char.vdt,-,-,:
bfc=S,1,N,Building Function Category,int.vdt,-,-,:
exs=S,1,N,Existence Category,int.vdt,-,-,:
hgt=S,1,N,Height Above Surface Level (meters),int.vdt,-,-,:
len=S,1,N,Length/Diameter (meters),int.vdt,-,-,:
nam=T,*,N,Name,char.vdt,-,-,:
pro=S,1,N,Product Category,int.vdt,-,-,:
zv2=S,1,N,Highest Z-value (meters),int.vdt,-,-,:
tile_id=S,1,N,Tile Reference ID,-,tile1_id.pti,-,:
end_id=I,1,N,Entity Node Primitive ID,-,end1_id.pti,-,:;
```

Column	Description	Value	Value Meaning	Applicable f_code for Each Attribute Value
id	Row Identifier	Sequential beginning with 1		
f_code	FACC Feature Code			
		AL015	Building	
bfc	Building Function	Category		
		0	Unknown	AL015
		1	Fabrication Structures	AL015
		2	Government Building	AL015
		3	Capitol Building	AL015
		4	Castle	AL015
		5	Government Administration Building	AL015
		6	Hospital	AL015
		7	House of Worship	AL015
		8	Military Administration/ Operations Building	AL015
		9	Museum	AL015
		10	Observatory	AL015
		11	Palace	AL015
		12	Police Station	AL015
		13	Prison	AL015
		14	Ranger Station	AL015
		15	School	AL015
		16	House	AL015
		17	Multi Unit Dwelling	AL015

TABLE E-132. Buildings Point Feature Table (Continued).

18	Cemetery Building	AL015
19	Farm Building	AL015
20	Greenhouse	AL015
21	Garage	AL015
22	Watermill/Gristmill	AL015
23	Wind Tunnel	AL015
24	Warehouse	AL015
25	Roundhouse	AL015
26	Railroad Storage/Repair Facility	AL015
27	Depot Terminal	AL015
28	Administration Building	AL015
29	Aircraft Maintenance Shop	AL015
30	Hangar	AL015
31	Custom House	AL015
33	Health Office	AL015
35	Post Office	AL015
36	Barracks/Dormitory	AL015
37	Fire Station	AL015
53	Bank	AL015
59	R&D Lab/Research Facility	AL015
61	Courthouse	AL015
66	Embassy	AL015
69	Guard Shack/Guard Room	AL015
70	Kennel	AL015
77	Harbor Masters Office	AL015
82	Lighthouse	AL015
83	Power Generation	AL015
85	Newspaper Plant	AL015
86	Telephone Exchange (Main)	AL015
87	Auditorium	AL015
88	Opera House	AL015
89	Processing/Treatment	AL015
90	Pumphouse	AL015
91	Mobile Home	AL015
92	Weather Station	AL015
93	Dependents Housing/ Bivouac Area	AL015
95	Hotel	AL015
96	Diplomatic Building	AL015
98	Shed	AL015
999	Other	AL015

TABLE E-132. Buildings Point Feature Table (Continued).

exs	Existence Category			
		0	Unknown	AL015
		1	Definite	AL015
		2	Doubtful	AL015
		3	Reported	AL015
		5	Under Construction	AL015
		6	Abandoned/Disused	AL015
		7	Destroyed	AL015
		28	Operational	AL015
		601	Damaged (value added)	AL015
hgt	Height Above Surface Level (meters)			
		0	Unknown	AL015
		>0		AL015
len	Length/Diameter (meters)			
		0	Unknown	AL015
		>=3 and < 25		AL015
nam	Name			
		Character text string		AL015
		UNK (No entry present)		AL015
pro	Product Category			
		0	Unknown	AL015
		13	Chemical	AL015
		19	Coke	AL015
		64	Metal	AL015
		95	Sewage	AL015
		132	Not Applicable	AL015
		999	Other	AL015
zv2	Highest Z-value (meters)			
		29999	Unknown	AL015
		-400 to 11999		AL015

TABLE E-133. Fortification Point Feature Table.

Thematic Layer:	Population
Coverage Name:	pop
Feature Table Description:	Fortification Point Feature Table
Table Name:	fortp.pft
DQ Layer Number:	7
Portrayal Criteria:	AH050 must be landmark feature.

```
{Header length}L;
Fortification Point Feature Table;-;
id=I,1,P,Row Identifier,-,-,-,:
f_code=T,5,N,FACC Feature Code,char.vdt,-,-,:
nam=T,*,N,Name,char.vdt,-,-,:
wid=S,1,N,Width (meters),int.vdt,-,-,:
tile_id=S,1,N,Tile Reference ID,-,tile2_id.pti,-,:
end_id=I,1,N,Entity Node Primitive ID,-,end2_id.pti,-,:;
```

Column	Description	Value	Value Meaning	Applicable f_code for Each Attribute Value
id	Row Identifier	Sequential beginning with 1		
f_code	FACC Feature Code			
		AH050	Fortification	
nam	Name			
		Character text string		AH050
		UNK (No entry present)		AH050
wid	Width (meters)			
		0	Unknown	AH050
		<=40		AH050

TABLE E-134. Landmark Point Feature Table.

Thematic Layer: Population
Coverage Name: pop
Feature Table Description: Landmark Point Feature Table
Table Name: landmrkp.pft
DQ Layer Number: 7
Portrayal Criteria: For AL030 must be landmark feature and/or < 15,625 square meters, for AK020 and AL130 if height <46 meters, then must be landmark feature.

```
{Header length}L;
Landmark Point Feature Table;-;
id=I,1,P,Row Identifier,-,-,-,:
f_code=T,5,N,FACC Feature Code,char.vdt,f_code3.pti,-:
exs=S,1,N,Existence Category,int.vdt,-,-,:
hgt=S,1,N,Height Above Surface Level (meters),int.vdt,-,-,:
nam=T,*,N,Name,char.vdt,-,-,:
ssc=S,1,N,Structure Shape Category,int.vdt,-,-,:
zv2=S,1,N,Highest Z-value (meters),int.vdt,-,-,:
tile_id=S,1,N,Tile Reference ID,-,tile3_id.pti,-,:
end_id=I,1,N,Entity Node Primitive ID,-,end3_id.pti,-,:;
```

Column	Description	Value	Value Meaning	Applicable f_code for Each Attribute Value
id	Row Identifier	Sequential beginning with 1		
f_code	FACC Feature Code			
		AK020	Amusement Park Attraction	
		AL030	Cemetery	
		AL130	Monument	
exs	Existence Category			
		0	Unknown	AK020,AL130
		1	Definite	AK020,AL130
		2	Doubtful	AK020,AL130
		3	Reported	AK020,AL130
		31	Isolated	AL030
		61	Not Isolated	AL030
hgt	Height Above Surface Level (meters)			
		-32768	Null	AL030
		0	Unknown	AK020,AL130
		1 to no upper limit		AK020,AL130
nam	Name			
		Variable length text		
		= zero-length	Null	AK020,AL030
		Character text string		AL130
		UNK (No entry present)		AL130

TABLE E-134. Landmark Point Feature Table (Continued).

ssc	Structure Shape Category			
		-32768	Null	AL030
		0	Unknown	AK020,AL130
		12	Pyramid	AL130
		17	Spherical (Hemispherical)	AK020
		21	Artificial Mountain	AK020
		23	Ferris Wheel	AK020
		25	Roller Coaster	AK020
		77	Arch	AL130
		109	Obelisk	AL130
		999	Other	AK020,AL130
zv2	Highest Z-value (meters)			
		-32768	Null	AL030
		29999	Unknown	AK020,AL130
		-400 to 11999		AK020,AL130

TABLE E-135. Miscellaneous Population Point Feature Table.

Thematic Layer:	Population
Coverage Name:	pop
Feature Table Description:	Miscellaneous Population Point Feature Table
Table Name:	mispopp.pft
DQ Layer Number:	7
Portrayal Criteria:	For AL100 and AL250 must be landmark features.

```
{Header length}L;
Miscellaneous Population Point Feature Table;-;
id=I,1,P,Row Identifier,-,-,-,:
f_code=T,5,N,FACC Feature Code,char.vdt,f_code4.pti,-,:
tile_id=S,1,N,Tile Reference ID,-,tile4_id.pti,-,:
end_id=I,1,N,Entity Node Primitive ID,-,end4_id.pti,-,:;
```

Column	Description	Value	Value Meaning	Applicable f_code for Each Attribute Value
id	Row Identifier	Sequential beginning with 1		
f_code	FACC Feature Code			
		AL100	Hut	
		AL250	Underground Dwelling	

TABLE E-136. Ruins Point Feature Table.

Thematic Layer: Population
Coverage Name: pop
Feature Table Description: Ruins Point Feature Table
Table Name: ruinsp.pft
DQ Layer Number: 7
Portrayal Criteria: AL200 must be landmark feature, located on the ground, area < 15,625 square meters.

```
{Header length}L;
Ruins Point Feature Table;-;
id=I,1,P,Row Identifier,-,-,-,:
f_code=T,5,N,FACC Feature Code,char.vdt,-,-,:
hgt=S,1,N,Height Above Surface Level (meters),int.vdt,-,-,:
tile_id=S,1,N,Tile Reference ID,-,tile5_id.pti,-,:
end_id=I,1,N,Entity Node Primitive ID,-,end5_id.pti,-,:;
```

Column	Description	Value	Value Meaning	Applicable f_code for Each Attribute Value
id	Row Identifier	Sequential beginning with 1		
f_code	FACC Feature Code			
		AL200	Ruins	
hgt	Height Above Surface Level (meters)			
		0	Unknown	AL200
		>0		AL200

TABLE E-137. Buildings Line Join Table.

(This table is used to combine linear population features with their associated edge primitives in a one-to-many relationship.)

```
{Header length}L;
Buildings Line Join Table;-;
id=I,1,S,Row Identifier,-,-,-,:
buildl.lft_id=I,1,N,Feature Key,-,buildl.jti,-,:
tile_id=S,1,N,Tile Reference ID,-,tile1_id.jti,-,:
edg_id=I,1,N,Edge Primitive ID,-,edg1_id.jti,-,:;
```

TABLE E-138. Buildings Line Feature Table.

Thematic Layer: Population
Coverage Name: pop
Feature Table Description: Buildings Line Feature Table
Table Name: buildl.lft
DQ Layer Number: 7
Portrayal Criteria: Must be prominent building with length >= 25 meters and width < 25 meters.

```
{Header length}L;
Buildings Line Feature Table;-;
id=I,1,P,Row Identifier,-,-,-,:
f_code=T,5,N,FACC Feature Code,char.vdt,-,-,:
bfc=S,1,N,Building Function Category,int.vdt,-,-,:
exs=S,1,N,Existence Category,int.vdt,-,-,:
hgt=S,1,N,Height Above Surface Level (meters),int.vdt,-,-,:
len=S,1,N,Length/Diameter (meters),int.vdt,-,-,:
nam=T,*,N,Name,char.vdt,-,-,:
pro=S,1,N,Product Category,int.vdt,-,-,:
wid=S,1,N,Width (meters),int.vdt,-,-,:;
```

Column	Description	Value	Value Meaning	Applicable f_code for Each Attribute Value
id	Row Identifier	Sequential beginning with 1		
f_code	FACC Feature Code			
		AL015	Building	
bfc	Building Function	Category		
		0	Unknown	AL015
		1	Fabrication Structures	AL015
		2	Government Building	AL015
		3	Capitol Building	AL015
		4	Castle	AL015
		5	Government Administration Building	AL015
		6	Hospital	AL015
		7	House of Worship	AL015
		8	Military Administration/ Operations Building	AL015
		9	Museum	AL015
		10	Observatory	AL015

TABLE E-138. Buildings Line Feature Table (Continued).

11	Palace	AL015
12	Police Station	AL015
13	Prison	AL015
14	Ranger Station	AL015
15	School	AL015
16	House	AL015
17	Multi Unit Dwelling	AL015
18	Cemetery Building	AL015
19	Farm Building	AL015
20	Greenhouse	AL015
21	Garage	AL015
22	Watermill/Gristmill	AL015
23	Wind Tunnel	AL015
24	Warehouse	AL015
25	Roundhouse	AL015
26	Railroad Storage/Repair Facility	AL015
27	Depot Terminal	AL015
28	Administration Building	AL015
29	Aircraft Maintenance Shop	AL015
30	Hangar	AL015
31	Custom House	AL015
33	Health Office	AL015
35	Post Office	AL015
36	Barracks/Dormitory	AL015
37	Fire Station	AL015
53	Bank	AL015
59	R&D Lab/Research Facility	AL015
61	Courthouse	AL015
66	Embassy	AL015
69	Guard Shack/Guard Room	AL015
70	Kennel	AL015
77	Harbor Masters Office	AL015
82	Lighthouse	AL015
83	Power Generation	AL015
85	Newspaper Plant	AL015
86	Telephone Exchange (Main)	AL015
87	Auditorium	AL015
88	Opera House	AL015
89	Processing/Treatment	AL015
90	Pumphouse	AL015
91	Mobile Home	AL015
92	Weather Station	AL015
93	Dependents Housing/ Bivouac Area	AL015
95	Hotel	AL015
96	Diplomatic Building	AL015
98	Shed	AL015
999	Other	AL015

TABLE E-138. Buildings Line Feature Table (Continued).

exs	Existence Category			
		0	Unknown	AL015
		5	Under Construction	AL015
		6	Abandoned/Disused	AL015
		7	Destroyed	AL015
		28	Operational	AL015
		601	Damaged (value added)	AL015
hgt	Height Above Surface Level (meters)			
		0	Unknown	AL015
		>0		AL015
len	Length/Diameter (meters)			
		0	Unknown	AL015
		>= 25		AL015
nam	Name			
		Character text string		AL015
		UNK (No entry present)		AL015
pro	Product Category			
		0	Unknown	AL015
		13	Chemical	AL015
		19	Coke	AL015
		64	Metal	AL015
		95	Sewage	AL015
		132	Not Applicable	AL015
		999	Other	AL015
wid	Width (meters)			
		0	Unknown	AL015
		<25		AL015

TABLE E-139. Landmark Line Join Table.

(This table is used to combine linear population features with their associated edge primitives in a one-to-many relationship.)

```
{Header length}L;
Landmark Line Join Table;-;
id=I,1,P,Row Identifier,-,-,-,:
landmrkl.lft_id=I,1,N,Feature Key,-,lndmrkl.jti,-,:
tile_id=S,1,N,Tile Reference ID,-,tile2_id.jti,-,:
edg_id=I,1,N,Edge Primitive ID,-,edg2_id.jti,-,:;
```

TABLE E-140. Landmark Line Feature Table.

Thematic Layer: Population
Coverage Name: pop
Feature Table Description: Landmark Line Feature Table
Table Name: landmrkl.lft
DQ Layer Number: 7
Portrayal Criteria: For AK130 must be landmark feature or length >= 65 meters.

```
{Header length}L;
Landmark Line Feature Table;-;
id=I,1,P,Row Identifier,-,-,-,:
f_code=T,5,N,FACC Feature Code,char.vdt,-,-,:
len=S,1,N,Length/Diameter (meters),int.vdt,-,-,:
nam=T,*,N,Name,char.vdt,-,-,:;
```

Column	Description	Value	Value Meaning	Applicable f_code for Each Attribute Value
id	Row Identifier	Sequential beginning with 1		
f_code	FACC Feature Code			
		AK130	Race Track	
len	Length/Diameter (meters)			
		0	Unknown	AK130
		>=65		AK130
nam	Name			
		Character text string		AK130
		UNK (No entry present)		AK130

TABLE E-141. Buildings Area Join Table.

(This table is used to combine area population features with their associated face primitives in a one-to-many relationship.)

```
{Header length}L;
Buildings Area Join Table;-;
id=I,1,P,Row Identifier,-,-,-,:
builda.aft_id=I,1,N,Feature Key,-,builda.jti,-,:
tile_id=S,1,N,Tile Reference ID,-,tile3_id.jti,-,:
fac_id=I,1,N,Face Primitive ID,-,fac3_id.jti,-,:;
```

TABLE E-142. Buildings Area Feature Table.

Thematic Layer: Population
Coverage Name: pop
Feature Table Description: Buildings Area Feature Table
Table Name: builda.aft
DQ Layer Number: 7
Portrayal Criteria: Must be prominent feature and width >= 25 meters.

```
{Header length}L;
Buildings Area Feature Table;-;
id=I,1,P,Row Identifier,-,-,-,:
f_code=T,5,N,FACC Feature Code,char.vdt,-,-,:
bfc=S,1,N,Building Function Category,int.vdt,-,-,:
exs=S,1,N,Existence Category,int.vdt,-,-,:
hgt=S,1,N,Height Above Surface Level (meters),int.vdt,-,-,:
len=S,1,N,Length/Diameter (meters),int.vdt,-,-,:
nam=T,*,N,Name,char.vdt,-,-,:
pro=S,1,N,Product Category,int.vdt,-,-,:
wid=S,1,N,Width (meters),int.vdt,-,-,:;
```

Column	Description	Value	Value Meaning	Applicable f_code for Each Attribute Value
id	Row Identifier	Sequential beginning with 1		
f_code	FACC Feature Code			
		AL015	Building	
bfc	Building Function	Category		
		0	Unknown	AL015
		1	Fabrication Structures	AL015
		2	Government Building	AL015
		3	Capitol Building	AL015
		4	Castle	AL015
		5	Government Administration Building	AL015
		6	Hospital	AL015
		7	House of Worship	AL015

TABLE E-142. Buildings Area Feature Table (Continued).

8	Military Administration/ Operations Building	AL015
9	Museum	AL015
10	Observatory	AL015
11	Palace	AL015
12	Police Station	AL015
13	Prison	AL015
14	Ranger Station	AL015
15	School	AL015
16	House	AL015
17	Multi Unit Dwelling	AL015
18	Cemetery Building	AL015
19	Farm Building	AL015
20	Greenhouse	AL015
21	Garage	AL015
22	Watermill/Gristmill	AL015
23	Wind Tunnel	AL015
24	Warehouse	AL015
25	Roundhouse	AL015
26	Railroad Storage/Repair Facility	AL015
27	Depot Terminal	AL015
28	Administration Building	AL015
29	Aircraft Maintenance Shop	AL015
30	Hangar	AL015
31	Custom House	AL015
33	Health Office	AL015
35	Post Office	AL015
36	Barracks/Dormitory	AL015
37	Fire Station	AL015
53	Bank	AL015
59	R&D Lab/Research Facility	AL015
61	Courthouse	AL015
66	Embassy	AL015
69	Guard Shack/Guard Room	AL015
70	Kennel	AL015
77	Harbor Masters Office	AL015
82	Lighthouse	AL015
83	Power Generation	AL015
85	Newspaper Plant	AL015
86	Telephone Exchange (Main)	AL015
87	Auditorium	AL015
88	Opera House	AL015
89	Processing/Treatment	AL015
90	Pumphouse	AL015
91	Mobile Home	AL015
92	Weather Station	AL015
93	Dependents Housing/ Bivouac Area	AL015

TABLE E-142. Buildings Area Feature Table (Continued).

		95	Hotel	AL015
		96	Diplomatic Building	AL015
		98	Shed	AL015
		999	Other	AL015
exs	Existence Category			
		0	Unknown	AL015
		5	Under Construction	AL015
		6	Abandoned/Disused	AL015
		7	Destroyed	AL015
		28	Operational	AL015
		601	Damaged (value added)	AL015
hgt	Height Above Surface Level (meters)			
		0	Unknown	AL015
		>1		AL015
len	Length/Diameter (meters)			
		0	Unknown	AL015
		>1		AL015
nam	Name			
		Character text string		AL015
		UNK (No entry present)		AL015
pro	Product Category			
		0	Unknown	AL015
		13	Chemical	AL015
		19	Coke	AL015
		64	Metal	AL015
		95	Sewage	AL015
		132	Not Applicable	AL015
		999	Other	AL015
wid	Width (meters)			
		0	Unknown	AL015
		>= 25		AL015

TABLE E-143. Built-Up Area Related Attribute Join Table.

(This table is used to combine built-up area features with their associated related attribute table containing the name of the area.)

```
{Header length}L;
Built-Up Area Related Attribute Join Table;-;
id=I,1,P,Row Identifier,-,-,-,:
builtupa.aft_id=I,1,N,Feature Key,-,buarat1.jti,-,:
rat_id=I,1,N,Row identifier for the related attribute table,-,buarat4.jti,-,:;
```

TABLE E-144. Built-Up Area Related Attribute Table.

(This table is used to store the name as text for built-up areas. Text will be represented in upper case.)

```
{Header length}L;
builtupa.rat,Built-Up Area Related Attribute Table;-;
id=I,1,P,Row Identifier,-,-,-,:
text=T,*,N,Text for Built-Up Areas Names,-,-,-,:;
```

TABLE E-145. Built-Up Area Join Table.

(This table is used to combine area population features with their associated face primitives in a one-to-many relationship.)

```
{Header length}L;
Built-Up Area Join Table;-;
id=I,1,P,Row Identifier,-,-,-,:
builtupa.aft_id=I,1,N,Feature Key,-,builtupa.jti,-,:
tile_id=S,1,N,Tile Reference ID,-,tile4_id.jti,-,:
fac_id=I,1,N,Face Primitive ID,-,fac4_id.jti,-,:;
```

TABLE E-146. Built-Up Area Area Feature Table.

Thematic Layer: Population
Coverage Name: pop
Feature Table Description: Built-Up Area Area Feature Table
Table Name: builtupa.aft
DQ Layer Number: 7
Portrayal Criteria: Whereas contiguous regions of AL020, AL135, and AL105 with areas >=15,625 square meters and <50,000 square meters will not be differentiated based on their attributes. Larger contiguous areas must exceed 50,000 square meters for further delineation and attribution. For AL105 and AL135 only residential and mixed urban categories will be captured for use category.

```
{Header length}L;
Built-Up Area Area Feature Table;-;
id=I,1,P,Row Identifier,-,-,-,:
f_code=T,5,N,FACC Feature Code,char.vdt,f_code4.ati,-,:
mcc=S,1,N,Material Composition Category,int.vdt,-,-,:
ph4=S,1,N,Predominant Height (10m Range),int.vdt,-,-,:
ppt=S,1,N,Populated Place Type,int.vdt,-,-,:
use=S,1,N,Usage,int.vdt,-,-,:
usp=S,1,N,Urban Street Pattern,int.vdt,-,-,:;
```

TABLE E-146. Built-Up Area Area Feature Table (Continued).

Column	Description	Value	Value Meaning	Applicable f_code for Each Attribute Value
id	Row Identifier	Sequential beginning with 1		
f_code	FACC Feature Code			
		AL020	Built-Up Area	
		AL105	Settlement	
		AL135	Native Settlement	
mcc	Material Composition Category (value added)			
		0	Unknown [default]	AL020,AL105,AL135
		9	Brick	AL020,AL105,AL135
		21	Concrete	AL020,AL105,AL135
		62	Masonry	AL020,AL105,AL135
		64	Metal	AL020,AL105,AL135
		108	Stone	AL020,AL105,AL135
		117	Wood	AL020,AL105,AL135
		999	Other	AL020,AL105,AL135
ph4	Predominant Height (10m Range)			
		0	Unknown [default]	AL020,AL105,AL135
		1	<= 10	AL020,AL105,AL135
		2	> 10 and <= 20	AL020,AL105,AL135
		3	> 20 and <= 30	AL020,AL105,AL135
		4	> 30 and <= 40	AL020,AL105,AL135
		5	> 40 and <= 50	AL020,AL105,AL135
		6	> 50 and <= 60	AL020,AL105,AL135
		7	> 60 and <= 70	AL020,AL105,AL135
		8	> 70 and <= 80	AL020,AL105,AL135
		9	> 80 and <= 90	AL020,AL105,AL135
		10	> 90 and <= 100	AL020,AL105,AL135
		11	> 100	AL020,AL105,AL135
ppt	Populated Place Type			
		-32768	Null	AL020,AL135
		0	Unknown	AL105
		2	Shantytown	AL105
use	Usage			
		0	Unknown [default]	AL020,AL105,AL135
		8	Military	AL020
		41	Industrial	AL020
		42	Commercial	AL020
		43	Governmental and Institutional	AL020
		44	Residential	AL020,AL105,AL135
		120	Recreational	AL020
		128	Mixed Urban or Built-up Land	AL020,AL105,AL135
		134	Utilities and Communication	AL020
		999	Other	AL020

TABLE E-146. Built-Up Area Area Feature Table (Continued).

usp	Urban Street Pattern (Value added)			
		0	Unknown [default]	AL020,AL105,AL135
		2	Rectangular/ Grid-Regular	AL020,AL105,AL135
		3	Rectagular/ Grid-Irregular	AL020,AL105,AL135
		4	Curvilinear (cluster)	AL020,AL105,AL135
		6	Concentric/ Radial-Regular	AL020,AL105,AL135
		7	Concentric/Radial -Irregular	AL020,AL105,AL135
		9	Mixed-Curvilinear (cluster) and Rectangular (grid)	AL020,AL105,AL135
		10	Mixed-Concentric/ Radial and Rectangular (grid)	AL020,AL105,AL135
		11	Curvilinear (cluster) and Concentric/Radial	AL020,AL105,AL135
		12	Other	AL020,AL105,AL135
		13	Linear Strip	AL020,AL105,AL135

TABLE E-147. Fortification Area Join Table.

(This table is used to combine area population features with their associated face primitives in a one-to-many relationship.)

```
{Header length}L;
Fortification Area Join Table;-;
id=I,1,P,Row Identifier,-,-,-,:
forta.aft_id=I,1,N,Feature Key,-,forta.jti,-,:
tile_id=S,1,N,Tile Reference ID,-,tile5_id.jti,-,:
fac_id=I,1,N,Face Primitive ID,-,fac5_id.jti,-,:;
```

TABLE E-148. Fortification Area Feature Table.

Thematic Layer:	Population
Coverage Name:	pop
Feature Table Description:	Fortification Area Feature Table
Table Name:	forta.aft
DQ Layer Number:	7
Portrayal Criteria:	For AH050 width > 40 meters.

```
{Header length}L;
Fortification Area Feature Table;-;
id=I,1,P,Row Identifier,-,-,-,:
f_code=T,5,N,FACC Feature Code,char.vdt,-,-,:
nam=T,*,N,Name,char.vdt,-,-,:
wid=S,1,N,Width (meters),int.vdt,-,-,:;
```

Column	**Description**	**Value**	**Value Meaning**	**Applicable f_code for Each Attribute Value**
id	Row Identifier	Sequential beginning with 1		
f_code	FACC Feature Code			
		AH050	Fortification	
nam	Name			
		Character text string		AH050
		UNK (No entry present)		AH050
wid	Width (meters)			
		0	Unknown	AH050
		> 40		AH050

TABLE E-149. Landmark Area Join Table.

(This table is used to combine area population features with their associated face primitives in a one-to-many relationship.)

```
{Header length}L;
Landmark Area Join Table;-;
id=I,1,P,Row Identifier,-,-,-,:
landmrka.aft_id=I,1,N,Feature Key,-,landmrka.jti,-,:
tile_id=S,1,N,Tile Reference ID,-,tile6_id.jti,-,:
fac_id=I,1,N,Face Primitive ID,-,fac6_id.jti,-,:;
```

TABLE E-150. Landmark Area Feature Table.

Thematic Layer: Population
Coverage Name: pop
Feature Table Description: Landmark Area Feature Table
Table Name: landmrka.aft
DQ Layer Number: 7
Portrayal Criteria: For AK030, AK060, AK090, AK100, AK120, AK180, AL030 area >= 15,625 square meters or landmark feature except for AL030.

```
{Header length}L;
Landmark Area Feature Table;-;
id=I,1,P,Row Identifier,-,-,-,:
f_code=T,5,N,FACC Feature Code,char.vdt,f_code6.ati,-,:
nam=T,*,N,Name,char.vdt,-,-,:;
```

Column	Description	Value	Value Meaning	Applicable f_code for Each Attribute Value
id	Row Identifier	Sequential beginning with 1		
f_code	FACC Feature Code			
		AK030	Amusement Park	
		AK060	Campground/Campsite	
		AK090	Fairgrounds	
		AK100	Golf Course	
		AK120	Park	
		AK180	Zoo/Safari Park	
		AL030	Cemetery	
nam	Name			
		Character text string		AK030,AK060, AK090,AK100, AK120,AK180, AL030
		UNK (No entry present)		AK030,AK060, AK090,AK100, AK120,AK180, AL030

TABLE E-151. Mobile Home Area Join Table.

(This table is used to combine area population features with their associated face primitives in a one-to-many relationship.)

```
{Header length}L;
Mobile Home Area Join Table;-;
id=I,1,P,Row Identifier,-,-,-,:
mobilea.aft_id=I,1,N,Feature Key,-,mobilea.jti,-,:
tile_id=S,1,N,Tile Reference ID,-,tile7_id.jti,-,:
fac_id=I,1,N,Face Primitive ID,-,fac7_id.jti,-,:;
```

TABLE E-152. Mobile Home Area Feature Table.

Thematic Layer: Population
Coverage Name: pop
Feature Table Description: Mobile Home Area Feature Table
Table Name: mobilea.aft
DQ Layer Number: 7
Portrayal Criteria: For AI020 area >= 15,625 square meters and landmark feature.

```
{Header length}L;
Mobile Home Area Feature Table;-;
id=I,1,P,Row Identifier,-,-,-,:
f_code=T,5,N,FACC Feature Code,char.vdt,-,-,:;
```

Column	Description	Value	Value Meaning	Applicable f_code for Each Attribute Value
id	Row Identifier	Sequential beginning with 1		
f_code	FACC Feature Code			
		AI020	Mobile Home/Mobile Home Park	

TABLE E-153. Plaza Area Join Table.

(This table is used to combine area population features with their associated face primitives in a one-to-many relationship.)

```
{Header length}L;
Plaza Area Join Table;-;
id=I,1,P,Row Identifier,-,-,-,:
plazaa.aft_id=I,1,N,Feature Key,-,plazaa.jti,-,:
tile_id=S,1,N,Tile Reference ID,-,tile8_id.jti,-,:
fac_id=I,1,N,Face Primitive ID,-,fac8_id.jti,-,:;
```

TABLE E-154. Plaza Area Feature Table.

Thematic Layer: Population
Coverage Name: pop
Feature Table Description: Plaza Area Feature Table
Table Name: plazaa.aft
DQ Layer Number: 7

```
{Header length}L;
Plaza Area Feature Table;-;
id=I,1,P,Row Identifier,-,-,-,:
f_code=T,5,N,FACC Feature Code,char.vdt,-,-,:
nam=T,*,N,Name,char.vdt,-,-,:
wid=S,1,N,Width (meters),int.vdt,-,-,:;
```

Column	Description	Value	Value Meaning	Applicable f_code for Each Attribute Value
id	Row Identifier	Sequential beginning with 1		
f_code	FACC Feature Code			
		AL170	Plaza/City Square	
nam	Name			
		Character text string		AL170
		UNK (No entry present)		AL170
wid	Width (meters)			
		0	Unknown	AL170
		>= 25		AL170

TABLE E-155. Ruins Area Join Table.

(This table is used to combine area population features with their associated face primitives in a one-to-many relationship.)

```
{Header length}L;
Ruins Area Join Table;-;
id=I,1,P,Row Identifier,-,-,-,:
ruinsa.aft_id=I,1,N,Feature Key,-,ruinsa.jti,-,:
tile_id=S,1,N,Tile Reference ID,-,tile9_id.jti,-,:
fac_id=I,1,N,Face Primitive ID,-,fac9_id.jti,-,:;
```

TABLE E-156. Ruins Area Feature Table.

Thematic Layer: Population
Coverage Name: pop
Feature Table Description: Ruins Area Feature Table
Table Name: ruinsa.aft
DQ Layer Number: 7
Portrayal Criteria: For AL200 area >= 15,625 square meters and on the ground.

```
{Header length}L;
Ruins Area Feature Table;-;
id=I,1,P,Row Identifier,-,-,-,:
f_code=T,5,N,FACC Feature Code,char.vdt,-,-,:
hgt=S,1,N,Height Above Surface Level (meters),int.vdt,-,-,:
nam=T,*,N,Name,char.vdt,-,-,:;
```

Column	Description	Value	Value Meaning	Applicable f_code for Each Attribute Value
id	Row Identifier	Sequential beginning with 1		
f_code	FACC Feature Code			
		AL200	Ruins	
hgt	Height Above Surface Level (meters)			
		0	Unknown	AL200
		>0		AL200
nam	Name			
		Character text string		AL200
		UNK (No entry present)		AL200

TABLE E-157. Sport Area Join Table.

(This table is used to combine area population features with their associated face primitives in a one-to-many relationship.)

```
{Header length}L;
Sport Area Join Table;-;
id=I,1,P,Row Identifier,-,-,-,:
sporta.aft_id=I,1,N,Feature Key,-,sporta.jti,-,:
tile_id=S,1,N,Tile Reference ID,-,til10_id.jti,-,:
fac_id=I,1,N,Face Primitive ID,-,fac10_id.jti,-,:;
```

TABLE E-158. Sport Area Feature Table.

Thematic Layer: Population
Coverage Name: pop
Feature Table Description: Sport Area Feature Table
Table Name: sporta.aft
DQ Layer Number: 7
Portrayal Criteria: For AK040 area >= 8,125 square meters, for AK160 area >=15,625 square meters or landmark feature, and for AK170 must be landmark feature.

```
{Header length}L;
Sport Area Feature Table;-;
id=I,1,P,Row Identifier,-,-,-,:
f_code=T,5,N,FACC Feature Code,char.vdt,f_code10.ati,-,:
hgt=S,1,N,Height Above Surface Level (meters),int.vdt,-,-,:
nam=T,*,N,Name,char.vdt,-,-,:;
```

Column	Description	Value	Value Meaning	Applicable f_code for Each Attribute Value
id	Row Identifier	Sequential beginning with 1		
f_code	FACC Feature Code			
		AK040	Athletic Field	
		AK160	Stadium/Amphitheater	
		AK170	Swimming Pool	
hgt	Height Above Surface Level (meters)			
		-32768	Null	AK040,AK170
		0	Unknown	AK160
		1 to no upper limit		AK160
nam	Name			
	Variable length			
	text = zero – length	Null		AK170
		Character text string		AK040,AK160
		UNK (No entry present)		AK040,AK160

TABLE E-159. Population Void Collection Area Join Table.
(This table is used to combine area population features with their associated face primitives in a one-to-many relationship.)

```
{Header length}L;
Population Void Collection Area Join Table;-;
id=I,1,P,Row Identifier,-,-,-,:
popvoida.aft_id=I,1,N,Feature Key,-,popvoida.jti,-,:
tile_id=S,1,N,Tile Reference ID,-,til11_id.jti,-,:
fac_id=I,1,N,Face Primitive ID,-,fac11_id.jti,-,:;
```

TABLE E-160. Population Void Collection Area Feature Table.

Thematic Layer:	Population
Coverage Name:	pop
Feature Table Description:	Population Void Collection Area Feature Table
Table Name:	popvoida.aft
DQ Layer Number:	7
Portrayal Criteria:	For ZD020 area >= 15,625 square meters.

```
{Header length}L;
Population Void Collection Area Feature Table;-;
id=I,1,P,Row Identifier,-,-,-,:
f_code=T,5,N,FACC Feature Code,char.vdt,-,-,:
vca=S,1,N,Void Collection Attribute,int.vdt,-,-,:;
```

Column	Description	Value	Value Meaning	Applicable f_code for Each Attribute Value
id	Row Identifier	Sequential beginning with 1		
f_code	FACC Feature Code			
		ZD020	Void Collection Area	
vca	Void Collection Attribute			
		0	Unknown	ZD020
		2	Area Too Rough to Collect	ZD020
		3	No Available Imagery	ZD020
		6	No Available Map Source	ZD020
		7	No Suitable Imagery	ZD020

TABLE E-161. Population Text Feature Table

Thematic Layer:	Population
Coverage Name:	pop
Feature Table Description:	Population Text Feature Table
Table Name:	poptxt.tft
DQ Layer Number:	7
Portrayal Criteria:	For ZD020 area >= 15,625 square meters

```
{Header length}L;
Population Text Feature Table;-;
id=I,1,P,Row Identifier,-,-,-,:
f_code=T,5,N,FACC Feature Code,char.vdt,f_code.tti,-,:
tile_id=S,1,N,Tile Reference ID,-,tile_id.tti,-,:
txt_id=I,1,N,Text Primitive ID,-,txt_id.tti,-,:;
```

Column	Description	Value	Value Meaning	Applicable f_code for Each Attribute Value
id	Row Identifier	Sequential beginning with 1		
f_code	FACC Feature Code			
		ZD040	Named Location	
		ZD045	Text Description	

TABLE E-162. Population Feature Class Attribute Table.

Thematic Layer: Population
Coverage Name: pop
Table Description: Population Feature Class Attribute Table
Table Name: fca
DQ Layer Number: 7

```
{Header length}L;
Population Feature Class Attribute Table;-;
id=I,1,P,Row Identifier,-,-,-,:
fclass=T,8,U,Feature Class Name,-,-,-,:
type=T,1,N,Feature Type,char.vdt,-,-,:
descr=T,*,N,Description,-,-,-,:;
```

Column	Description	Value	Value Meaning	Applicable Feature Class for Each Attribute Value
id	Row Identifier	Sequential beginning with 1		
fclass	Feature Class Name			
		buildp		
		fortp		
		landmrkp		
		mispopp		
		ruinsp		
		buildl		
		landmrkl		
		builda		
		builtupa		
		forta		
		landmrka		
		mobilea		
		plazaa		
		popvoida		
		ruinsa		
		sporta		
		poptxt		
type	Feature Type			
		P	Point/Node Feature	buildp, fortp, landmrkp,mispopp, ruinsp
		L	Line Feature	buildl, landmrkl
		A	Area Feature	builda, builtupa, forta, landmrka, mobilea, plazaa, popvoida, ruinsa, sporta
		T	Text Feature	poptxt

TABLE E-162. Population Feature Class Attribute Table (Continued).

descr	Description		
		Building Point Features	buildp
		Fortification Sites	fortp
		Landmark Sites	landmrkp
		Huts and Underground Dwellings	mispopp
		Ruins Sites	ruinsp
		Building Line Features	buildl
		Race Tracks	landmrkl
		Building Area Features	builda
		Built-Up Areas	builtupa
		Fortification Areas	forta
		Parks	landmrka
		Mobile Home/Mobile Home Park	mobilea
		Plaza/City Square	plazaa
		Population Void Collection Areas	popvoida
		Ruins Areas	ruinsa
		Sport Field Areas	sporta
		Population Coverage Text	poptxt

TABLE E-163. Population Character Value Description Table.

Thematic Layer: Population
Coverage Name: pop
Feature Table Description: Population Character Value Description Table
Table Name: char.vdt
DQ Layer Number: 7

{Header length}L;
Population Character Value Description Table;-;
id=I,1,P,Row Identifier,-,-,-,:
table=T,12,N,Name of the Feature Table,-,-,-,:
attribute=T,6,N,Column Name,-,-,-,:
value=T,5,N,Unique Value of Attribute,-,-,-,:
description=T,*,N,Description of Value,-,-,-,:;

1	buildp.pft	f_code	AL015	Building
2	buildp.pft	nam	UNK	No entry present
3	fortp.pft	f_code	AH050	Fortification
4	fortp.pft	nam	UNK	No entry present
5	landmrkp.pft	f_code	AK020	Amusement Park Attraction
6	landmrkp.pft	f_code	AL030	Cemetery
7	landmrkp.pft	f_code	AL130	Monument
8	landmrkp.pft	nam	UNK	No entry present
9	mispopp.pft	f_code	AL100	Hut
10	mispopp.pft	f_code	AL250	Underground Dwelling
11	ruinsp.pft	f_code	AL200	Ruins
12	buildl.lft	f_code	AL015	Building
13	buildl.lft	nam	UNK	No entry present
14	landmrkl.lft	f_code	AK130	Race Track
15	landmrkl.lft	nam	UNK	No entry present
16	builda.aft	f_code	AL015	Building
17	builda.aft	nam	UNK	No entry present
18	builtupa.aft	f_code	AL020	Built-Up Area
19	builtupa.aft	f_code	AL105	Settlement
20	builtupa.aft	f_code	AL135	Native Settlement
21	forta.aft	f_code	AH050	Fortification
22	forta.aft	nam	UNK	No entry present
23	landmrka.aft	f_code	AK030	Amusement Park
24	landmrka.aft	f_code	AK060	Campground/Campsite
25	landmrka.aft	f_code	AK090	Fairgrounds
26	landmrka.aft	f_code	AK100	Golf Course
27	landmrka.aft	f_code	AK120	Park
28	landmrka.aft	f_code	AK180	Zoo/Safari Park
29	landmrka.aft	f_code	AL030	Cemetery
30	landmrka.aft	nam	UNK	No entry present
31	mobilea.aft	f_code	AI020	Mobile Home/Mobile Home Park
32	plazaa.aft	f_code	AL170	Plaza/City Square
33	plazaa.aft	nam	UNK	No entry present
34	popvoida.aft	f_code	ZD020	Void Collection Area
35	ruinsa.aft	f_code	AL200	Ruins
36	ruinsa.aft	nam	UNK	No entry present

TABLE E-163. Population Character Value Description Table (Continued).

37	sporta.aft	f_code	AK040	Athletic Field
38	sporta.aft	f_code	AK160	Stadium/Amphitheater
39	sporta.aft	f_code	AK170	Swimming Pool
40	sporta.aft	nam	UNK	No entry present
41	poptxt.tft	f_code	ZD040	Named Location
42	poptxt.tft	f_code	ZD045	Text Description
43	fca	type	A	Area Feature
44	fca	type	L	Line Feature
45	fca	type	P	Point/Node Feature
46	fca	type	T	Text Feature

E.3.9.1 Population coverage glossary.

AH050 Fortification (P,A) A facility constructed for the military defense of a site.
NAM Name (P,A) Any Identifier or code.
WID Width (meters) (P,A) A measurement of the shorter of two linear axes. For a square feature, measure either axis. For a round feature, width shall be equal to LEN.

AI020 Mobile Home/Mobile Home Park (A) A site for the permanent parking of trailer(s) used as dwellings and designed without a permanent foundation. (See also AK060 and AQ140)

AK020 Amusement Park Attraction (P) A large structure located in an Amusement Park.
EXS Existence Category (P) The state or condition of the feature.
HGT Height Above Surface Level (meters) (P) Distance measured from the lowest point of the base at ground or water level (downhill side/downstream side) to the tallest point of the feature.
SSC Structure Shape Category (P) Geometric form, appearance, or configuration of the feature.
ZV2 Highest Z-Value (meters) (P) Elevation above a given datum to the highest portion of the feature.

AK030 Amusement Park (A) A predominately man-made facility equipped with recreational devices. (See also AK090 and AK120).
NAM Name (A) Any Identifier or code.

AK040 Athletic Field (A) An open area where sporting events, exercise, or games occur.
NAM Name (A) Any identifier or code.

AK060 Campground/Campsite (A) A location for camping.
NAM Name (A) Any Identifier or code.

AK090 Fairgrounds (A) An area where permanent facilities exist to hold outdoor fairs, circuses or exhibitions. (See also AK030 and AK120)
NAM Name (A) Any Identifier or code.

AK100 Golf Course (A) An area of land laid out for the game of golf.
NAM Name (A) Any Identifier or code.

AK120 Park (A) An area used for recreational or ornamental purposes. (See also AK030, AK090, and AL170)
NAM Name (A) Any Identifier or code.

AK130 Race Track (L) A course for racing.
LEN Length/Diameter (meters) (L) A measurement of the longer of two linear axes in meters. For a square feature, measure either axis. For a round feature, measure the diameter.
NAM Name (L) Any Identifier or code.

AK160 Stadium/Ampitheater (A) An arena for holding and viewing events.
HGT Height Above Surface Level (meters) (A) Distance measured from the lowest point of the base at ground or water level (downhill side/downstream side) to the tallest point of the feature.
NAM Name (A) Any Identifier or code.

AK170 Swimming Pool (A) A constructed basin used for swimming outdoors.

AK180 Zoo/Safari Park (A) An area with a collection of live animals usually for public display.
NAM Name (A) Any Identifier or code.

AL015 Building (P,L,A) A relatively permanent structure, roofed and usually walled and designed for some particular use. (See also AL100).
BFC Building Function Category (P,L,A) Type or Purpose of the building.
EXS Existence Category (P,L,A) The state or condition of the feature.
HGT Height Above Surface Level (meters) (P,L,A) Distance measured from the lowest point of the base at ground or water level (downhill side/downstream side) to the tallest point of the feature.
LEN Length/Diameter (meters) (P,L,A) A measurement of the longer of two linear axes in meters. For a square feature, measure either axis. For a round feature, measure the diameter.
NAM Name (P,L,A) Any Identifier or code.
PRO Product Category (P,L,A) Principal material involved or product resulting from activity at site.
WID Width (meters) (L,A) A measurement of the shorter of two linear axes. For a square feature, measure either axis. For a round feature, width shall be equal to LEN.
ZV2 Highest Z-Value (meters) (P) Elevation above a given datum to the highest portion of the feature.

AL020 Built-Up Area (A) An area containing a concentration of buildings and other structures.
MCC Material Composition Category (A) Characteristics of primary material composition of feature.
PH4 Predominant Height (10m Range)(A) Predominant height range of a specified urban area (reported in 10 meter ranges.)
USE Usage (A) Use (Identifies the primary user, function, or controlling authority).

USP Urban Street Pattern (A) The predominant configuration of streets found within the delineated area of the feature.

AL030 Cemetery (P,A) An area of land for burying the dead.
EXS Existence Category (P) The state or condition of the feature.
NAM Name (A) Any Identifier or code.

AL100 Hut (P) A small simple or crude house or shelter (See also AL015).

AL105 Settlement (A) A concentration of small dwellings.
MCC Material Composition Category (A) Characteristics of primary material composition of feature.
PH4 Predominant Height (10m Range)(A) Predominant height range of a specified urban area (reported in 10 meter ranges.)
PPT Populated Place Type (A) The type of populated place.
USE Usage (A) Use (Identifies the primary user, function, or controlling authority).
USP Urban Street Pattern (A) The Predominant configuration of streets found within the delineated area of the feature.
AL130 Monument (P) A structure erected or maintained as a memorial to a person or event. (See also AL025, AL090, and AL240).
EXS Existence Category (P) The state or condition of the feature.
HGT Height Above Surface Level (meters) (P) Distance measured from the lowest point of the base at ground or water level (downhill side/downstream side) to the tallest point of the feature.
NAM Name (P) Any Identifier or code.
SSC Structure Shape Category (P) Geometric form, appearance, or configuration of the feature.
ZV2 Highest Z-Value (meters) (P) Elevation above a given datum to the highest portion of the feature.

AL135 Native Settlement (A) A concentration of native dwellings, generally of the hut type, which are not usually of substantial construction.
MCC Material Composition Category (A) Characteristics of primary material composition of feature.
PH4 Predominant Height (10m Range)(A) Predominant height range of a specified urban area (reported in 10 meter ranges.)
USE Usage (A) Use (Identifies the primary user, function, or controlling authority).
USP Urban Street Pattern (A) The Predominant configuration of streets found within the delineated area of the feature.

AL170 Plaza/City Square (A) An open area which serves as a public square in a city or town. (See also AK120)
NAM Name (A) Any Identifier or code.
WID Width (meters) (A) A measurement of the shorter of two linear axes. For a square feature, measure either axis. For a round feature, width shall be equal to LEN.

AL200 Ruins (P,A) The deteriorated remains of an unspecified structure (See also AL012).
HGT Height Above Surface Level (meters) (P,A) Distance measured from the lowest point of the base at ground or water level (downhill side/downstream side) to the tallest point of the feature.

NAM Name (A) Any Identifier or code.

AL250 Underground Dwelling (P) Underground living quarters (See also AL040).

ZD020 Void Collection Area (A) An area lacking suitable source coverage, or where data is not required.
VCA Void Collection Attribute (A) Reason data is not collected.

ZD040 Named Location (T) A geographic place on earth, not normally appearing as a feature on a map, but having a name that is required to be placed on a map.

ZD045 Text Description (T) An area in which a characteristic or an activity pertaining to the area can be described and possibly is labeled on a product if deemed important at the time the product is being produced.

TABLE E-164. Population Integer Value Description Table.

Thematic Layer: Population
Coverage Name: pop
Feature Table Description: Population Integer Value Description Table
Table Name: int.vdt
DQ Layer Number: 7

{Header length}L;
Population Integer Value Description Table;-;
id=I,1,P,Row Identifier,-,-,-,:
table=T,12,N,Name of the Feature Table,-,-,-,:
attribute=T,3,N,Column Name,-,-,-,:
value=S,1,N,Unique Value of Attribute,-,-,-,:
description=T,*,N,Description of Value,-,-,-,:;

1	buildp.pft	bfc	0	Unknown
2	buildp.pft	bfc	1	Fabrication Structures
3	buildp.pft	bfc	2	Government Building
4	buildp.pft	bfc	3	Capitol Building
5	buildp.pft	bfc	4	Castle
6	buildp.pft	bfc	5	Government Administration Building
7	buildp.pft	bfc	6	Hospital
8	buildp.pft	bfc	7	House of Worship
9	buildp.pft	bfc	8	Military Administration/Operations Building
10	buildp.pft	bfc	9	Museum
11	buildp.pft	bfc	10	Observatory
12	buildp.pft	bfc	11	Palace
13	buildp.pft	bfc	12	Police Station
14	buildp.pft	bfc	13	Prison
15	buildp.pft	bfc	14	Ranger Station
16	buildp.pft	bfc	15	School
17	buildp.pft	bfc	16	House
18	buildp.pft	bfc	17	Multi Unit Dwelling
19	buildp.pft	bfc	18	Cemetery Building
20	buildp.pft	bfc	19	Farm Building
21	buildp.pft	bfc	20	Greenhouse
22	buildp.pft	bfc	21	Garage
23	buildp.pft	bfc	22	Watermill/Gristmill
24	buildp.pft	bfc	23	Wind Tunnel
25	buildp.pft	bfc	24	Warehouse
26	buildp.pft	bfc	25	Roundhouse
27	buildp.pft	bfc	26	Railroad Storage/Repair Facility
28	buildp.pft	bfc	27	Depot Terminal
29	buildp.pft	bfc	28	Administration Building
30	buildp.pft	bfc	29	Aircraft Maintenance Shop
31	buildp.pft	bfc	30	Hangar
32	buildp.pft	bfc	31	Custom House
33	buildp.pft	bfc	33	Health Office
34	buildp.pft	bfc	35	Post Office
35	buildp.pft	bfc	36	Barracks/Dormitory
36	buildp.pft	bfc	37	Fire Station

TABLE E-164. Population Integer Value Description Table (Continued).

37	buildp.pft	bfc	53	Bank
38	buildp.pft	bfc	59	R&D Lab/Research Facility
39	buildp.pft	bfc	61	Courthouse
40	buildp.pft	bfc	66	Embassy
41	buildp.pft	bfc	69	Guard Shack/Guard Room
42	buildp.pft	bfc	70	Kennel
43	buildp.pft	bfc	77	Harbor Masters Office
44	buildp.pft	bfc	82	Lighthouse
45	buildp.pft	bfc	83	Power Generation
46	buildp.pft	bfc	85	Newspaper Plant
47	buildp.pft	bfc	86	Telephone Exchange (Main)
48	buildp.pft	bfc	87	Auditorium
49	buildp.pft	bfc	88	Opera House
50	buildp.pft	bfc	89	Processing/Treatment
51	buildp.pft	bfc	90	Pumphouse
52	buildp.pft	bfc	91	Mobile Home
53	buildp.pft	bfc	92	Weather Station
54	buildp.pft	bfc	93	Dependents Housing/Bivouac Area
55	buildp.pft	bfc	95	Hotel
56	buildp.pft	bfc	96	Diplomatic Building
57	buildp.pft	bfc	98	Shed
58	buildp.pft	bfc	999	Other
59	buildp.pft	exs	0	Unknown
60	buildp.pft	exs	1	Definite
61	buildp.pft	exs	2	Doubtful
62	buildp.pft	exs	3	Reported
63	buildp.pft	exs	5	Under Construction
64	buildp.pft	exs	6	Abandoned/Disused
65	buildp.pft	exs	7	Destroyed
66	buildp.pft	exs	28	Operational
67	buildp.pft	exs	601	Damaged
68	buildp.pft	hgt	0	Unknown
69	buildp.pft	len	0	Unknown
70	buildp.pft	pro	0	Unknown
71	buildp.pft	pro	13	Chemical
72	buildp.pft	pro	19	Coke
73	buildp.pft	pro	64	Metal
74	buildp.pft	pro	95	Sewage
75	buildp.pft	pro	132	Not Applicable
76	buildp.pft	pro	999	Other
77	buildp.pft	zv2	29999	Unknown
78	fortp.pft	wid	0	Unknown
79	landmrkp.pft	exs	0	Unknown
80	landmrkp.pft	exs	1	Definite
81	landmrkp.pft	exs	2	Doubtful
82	landmrkp.pft	exs	3	Reported
83	landmrkp.pft	exs	31	Isolated
84	landmrkp.pft	exs	61	Not Isolated
85	landmrkp.pft	hgt	0	Unknown
86	landmrkp.pft	ssc	0	Unknown
87	landmrkp.pft	ssc	12	Pyramid

TABLE E-164. Population Integer Value Description Table (Continued).

88	landmrkp.pft	ssc	17	Spherical (Hemispherical)
89	landmrkp.pft	ssc	21	Artificial Mountain
90	landmrkp.pft	ssc	23	Ferris Wheel
91	landmrkp.pft	ssc	25	Roller Coaster
92	landmrkp.pft	ssc	77	Arch
93	landmrkp.pft	ssc	109	Obelisk
94	landmrkp.pft	ssc	999	Other
95	landmrkp.pft	zv2	29999	Unknown
96	ruinsp.pft	hgt	0	Unknown
97	buildl.lft	bfc	0	Unknown
98	buildl.lft	bfc	1	Fabrication Structures
99	buildl.lft	bfc	2	Government Building
100	buildl.lft	bfc	3	Capitol Building
101	buildl.lft	bfc	4	Castle
102	buildl.lft	bfc	5	Government Administration Building
103	buildl.lft	bfc	6	Hospital
104	buildl.lft	bfc	7	House of Worship
105	buildl.lft	bfc	8	Military Administration/Operations Building
106	buildl.lft	bfc	9	Museum
107	buildl.lft	bfc	10	Observatory
108	buildl.lft	bfc	11	Palace
109	buildl.lft	bfc	12	Police Station
110	buildl.lft	bfc	13	Prison
111	buildl.lft	bfc	14	Ranger Station
112	buildl.lft	bfc	15	School
113	buildl.lft	bfc	16	House
114	buildl.lft	bfc	17	Multi Unit Dwelling
115	buildl.lft	bfc	18	Cemetery Building
116	buildl.lft	bfc	19	Farm Building
117	buildl.lft	bfc	20	Greenhouse
118	buildl.lft	bfc	21	Garage
119	buildl.lft	bfc	22	Watermill/Gristmill
120	buildl.lft	bfc	23	Wind Tunnel
121	buildl.lft	bfc	24	Warehouse
122	buildl.lft	bfc	25	Roundhouse
123	buildl.lft	bfc	26	Railroad Storage/Repair Facility
124	buildl.lft	bfc	27	Depot Terminal
125	buildl.lft	bfc	28	Administration Building
126	buildl.lft	bfc	29	Aircraft Maintenance Shop
127	buildl.lft	bfc	30	Hangar
128	buildl.lft	bfc	31	Custom House
129	buildl.lft	bfc	33	Health Office
130	buildl.lft	bfc	35	Post Office
131	buildl.lft	bfc	36	Barracks/Dormitory
132	buildl.lft	bfc	37	Fire Station
133	buildl.lft	bfc	53	Bank
134	buildl.lft	bfc	59	R&D Lab/Research Facility
135	buildl.lft	bfc	61	Courthouse
136	buildl.lft	bfc	66	Embassy
137	buildl.lft	bfc	69	Guard Shack/Guard Room

TABLE E-164. Population Integer Value Description Table (Continued).

138	buildl.lft	bfc	70	Kennel
139	buildl.lft	bfc	77	Harbor Masters Office
140	buildl.lft	bfc	82	Lighthouse
141	buildl.lft	bfc	83	Power Generation
142	buildl.lft	bfc	85	Newspaper Plant
143	buildl.lft	bfc	86	Telephone Exchange (Main)
144	buildl.lft	bfc	87	Auditorium
145	buildl.lft	bfc	88	Opera House
146	buildl.lft	bfc	89	Processing/Treatment
147	buildl.lft	bfc	90	Pumphouse
148	buildl.lft	bfc	91	Mobile Home
149	buildl.lft	bfc	92	Weather Station
150	buildl.lft	bfc	93	Dependents Housing/Bivouac Area
151	buildl.lft	bfc	95	Hotel
152	buildl.lft	bfc	96	Diplomatic Building
153	buildl.lft	bfc	98	Shed
154	buildl.lft	bfc	999	Other
155	buildl.lft	exs	0	Unknown
156	buildl.lft	exs	5	Under Construction
157	buildl.lft	exs	6	Abandoned/Disused
158	buildl.lft	exs	7	Destroyed
159	buildl.lft	exs	28	Operational
160	buildl.lft	exs	601	Damaged
161	buildl.lft	hgt	0	Unknown
162	buildl.lft	len	0	Unknown
163	buildl.lft	pro	0	Unknown
164	buildl.lft	pro	13	Chemical
165	buildl.lft	pro	19	Coke
166	buildl.lft	pro	64	Metal
167	buildl.lft	pro	95	Sewage
168	buildl.lft	pro	132	Not Applicable
169	buildl.lft	pro	999	Other
170	buildl.lft	wid	0	Unknown
171	landmrkl.lft	len	0	Unknown
172	builda.aft	bfc	0	Unknown
173	builda.aft	bfc	1	Fabrication Structures
174	builda.aft	bfc	2	Government Building
175	builda.aft	bfc	3	Capitol Building
176	builda.aft	bfc	4	Castle
177	builda.aft	bfc	5	Government Administration Building
178	builda.aft	bfc	6	Hospital
179	builda.aft	bfc	7	House of Worship
180	builda.aft	bfc	8	Military Administration/Operations Building
181	builda.aft	bfc	9	Museum
182	builda.aft	bfc	10	Observatory
183	builda.aft	bfc	11	Palace
184	builda.aft	bfc	12	Police Station
185	builda.aft	bfc	13	Prison
186	builda.aft	bfc	14	Ranger Station
187	builda.aft	bfc	15	School

TABLE E-164. Population Integer Value Description Table (Continued).

188	builda.aft	bfc	16	House
189	builda.aft	bfc	17	Multi Unit Dwelling
190	builda.aft	bfc	18	Cemetery Building
191	builda.aft	bfc	19	Farm Building
192	builda.aft	bfc	20	Greenhouse
193	builda.aft	bfc	21	Garage
194	builda.aft	bfc	22	Watermill/Gristmill
195	builda.aft	bfc	23	Wind Tunnel
196	builda.aft	bfc	24	Warehouse
197	builda.aft	bfc	25	Roundhouse
198	builda.aft	bfc	26	Railroad Storage/Repair Facility
199	builda.aft	bfc	27	Depot Terminal
200	builda.aft	bfc	28	Administration Building
201	builda.aft	bfc	29	Aircraft Maintenance Shop
202	builda.aft	bfc	30	Hangar
203	builda.aft	bfc	31	Custom House
204	builda.aft	bfc	33	Health Office
205	builda.aft	bfc	35	Post Office
206	builda.aft	bfc	36	Barracks/Dormitory
207	builda.aft	bfc	37	Fire Station
208	builda.aft	bfc	53	Bank
209	builda.aft	bfc	59	R&D Lab/Research Facility
210	builda.aft	bfc	61	Courthouse
211	builda.aft	bfc	66	Embassy
212	builda.aft	bfc	69	Guard Shack/Guard Room
213	builda.aft	bfc	70	Kennel
214	builda.aft	bfc	77	Harbor Masters Office
215	builda.aft	bfc	82	Lighthouse
216	builda.aft	bfc	83	Power Generation
217	builda.aft	bfc	85	Newspaper Plant
218	builda.aft	bfc	86	Telephone Exchange (Main)
219	builda.aft	bfc	87	Auditorium
220	builda.aft	bfc	88	Opera House
221	builda.aft	bfc	89	Processing/Treatment
222	builda.aft	bfc	90	Pumphouse
223	builda.aft	bfc	91	Mobile Home
224	builda.aft	bfc	92	Weather Station
225	builda.aft	bfc	93	Dependents Housing/Bivouac Area
226	builda.aft	bfc	95	Hotel
227	builda.aft	bfc	96	Diplomatic Building
228	builda.aft	bfc	98	Shed
229	builda.aft	bfc	999	Other
230	builda.aft	exs	0	Unknown
231	builda.aft	exs	5	Under Construction
232	builda.aft	exs	6	Abandoned/Disused
233	builda.aft	exs	7	Destroyed
234	builda.aft	exs	28	Operational
235	builda.aft	exs	601	Damaged
236	builda.aft	hgt	0	Unknown
237	builda.aft	len	0	Unknown
238	builda.aft	pro	0	Unknown

TABLE E-164. Population Integer Value Description Table (Continued).

239	builda.aft	pro	13	Chemical
240	builda.aft	pro	19	Coke
241	builda.aft	pro	64	Metal
242	builda.aft	pro	95	Sewage
243	builda.aft	pro	132	Not Applicable
244	builda.aft	pro	999	Other
245	builda.aft	wid	0	Unknown
246	builtupa.aft	mcc	0	Unknown
247	builtupa.aft	mcc	9	Brick
248	builtupa.aft	mcc	21	Concrete
249	builtupa.aft	mcc	62	Masonry
250	builtupa.aft	mcc	64	Metal
251	builtupa.aft	mcc	108	Stone
252	builtupa.aft	mcc	117	Wood
253	builtupa.aft	mcc	999	Other
254	builtupa.aft	ph4	0	Unknown
255	builtupa.aft	ph4	1	<= 10
256	builtupa.aft	ph4	2	> 10 and <= 20
257	builtupa.aft	ph4	3	> 20 and <= 30
258	builtupa.aft	ph4	4	> 30 and <= 40
259	builtupa.aft	ph4	5	> 40 and <= 50
260	builtupa.aft	ph4	6	> 50 and <= 60
261	builtupa.aft	ph4	7	> 60 and <= 70
262	builtupa.aft	ph4	8	> 70 and <= 80
263	builtupa.aft	ph4	9	> 80 and <= 90
264	builtupa.aft	ph4	10	> 90 and <= 100
265	builtupa.aft	ph4	11	> 100
266	builtupa.aft	ppt	0	Unknown
267	builtupa.aft	ppt	2	Shantytown
268	builtupa.aft	use	0	Unknown
269	builtupa.aft	use	8	Military
270	builtupa.aft	use	41	Industrial
271	builtupa.aft	use	42	Commercial
272	builtupa.aft	use	43	Governmental and Institutional
273	builtupa.aft	use	44	Residential
274	builtupa.aft	use	120	Recreational
275	builtupa.aft	use	128	Mixed Urban or Built-up Land
276	builtupa.aft	use	134	Utilities and Communication
277	builtupa.aft	use	999	Other
278	builtupa.aft	usp	0	Unknown
279	builtupa.aft	usp	2	Rectangular/Grid-Regular
280	builtupa.aft	usp	3	Rectangular/Grid-Irregular
281	builtupa.aft	usp	4	Curvilinear (cluster)
282	builtupa.aft	usp	6	Concentric/Radial-Regular
283	builtupa.aft	usp	7	Concentric/Radial-Irregular
284	builtupa.aft	usp	9	Mixed-Curvilinear (cluster) and Rectangular (grid)
285	builtupa.aft	usp	10	Mixed-Concentric/Radial and Rectangular (grid)
286	builtupa.aft	usp	11	Mixed-Curvilinear (cluster) and Concentric/Radial

TABLE E-164. Population Integer Value Description Table (Continued).

287	builtupa.aft	usp	12	Other
288	builtupa.aft	usp	13	Linear Strip
289	forta.aft	wid	0	Unknown
290	plazaa.aft	wid	0	Unknown
291	popvoida.aft	vca	0	Unknown
292	popvoida.aft	vca	2	Area Too Rough to Collect
293	popvoida.aft	vca	3	No Available Imagery
294	popvoida.aft	vca	6	No Available Map Source
295	popvoida.aft	vca	7	No Suitable Imagery
296	ruinsa.aft	hgt	0	Unknown
297	sporta.aft	hgt	0	Unknown

E.3.10 Surface Drainage coverage

TABLE E-165. Content and format for surface drainage coverage feature class schema table.

Thematic Layer: Surface Drainage
Coverage Name: sdr
Feature Table Description: Surface Drainage Feature Class Schema Table
Table Name: fcs
DQ Layer Number: 8

{Header length}L;
Surface Drainage Feature Class Schema Table;-;
id=I,1,P,Row Identifier,-,-,-,:
feature_class=T,8,N,Name of Feature Class,-,-,-,:
table1=T,12,N,First Table,-,-,-,:
table1_key=T,16,N,Column Name in First Table,-,-,-,:
table2=T,12,N,Second Table,-,-,-,:
table2_key=T,16,N,Column Name in Second Table,-,-,-,:;

1	damlockp	damlockp.pft	end_id	end	id
2	damlockp	end	id	damlockp.pft	end_id
3	intakep	intakep.pft	end_id	end	id
4	intakep	end	id	intakep.pft	end_id
5	springp	springp.pft	end_id	end	id
6	springp	end	id	springp.pft	end_id
7	damlockc	damlockc.pft	cnd_id	cnd	id
8	damlockc	cnd	id	damlockc.pft	cnd_id
9	rapidsc	rapidsc.pft	cnd_id	cnd	id
10	rapidsc	cnd	id	rapidsc.pft	cnd_id
11	sdrnode	sdrnode.pft	cnd_id	cnd	id
12	sdrnode	cnd	id	sdrnode.pft	cnd_id
13	springc	springc.pft	cnd_id	cnd	id
14	springc	cnd	id	springc.pft	cnd_id
15	chanell	chanell.lft	id	chanell.ljt	chanell.lft_id
16	chanell	chanell.ljt	edg_id	edg	id
17	chanell	edg	id	chanell.ljt	edg_id
18	chanell	chanell.ljt	chanell.lft_id	chanell.lft	id
19	daml	daml.lft	id	daml.ljt	daml.lft_id
20	daml	daml.ljt	edg_id	edg	id
21	daml	edg	id	daml.ljt	edg_id
22	daml	daml.ljt	daml.lft_id	daml.lft	id
23	fordl	fordl.lft	id	fordl.ljt	fordl.lft_id
24	fordl	fordl.ljt	edg_id	edg	id
25	fordl	edg	id	fordl.ljt	edg_id
26	fordl	fordl.ljt	fordl.lft_id	fordl.lft	id
27	misdrl	misdrl.lft	id	misdrl.ljt	misdrl.lft_id
28	misdrl	misdrl.ljt	edg_id	edg	id
29	misdrl	edg	id	misdrl.ljt	edg_id
30	misdrl	misdrl.ljt	misdrl.lft_id	misdrl.lft	id
31	penstkl	penstkl.lft	id	penstkl.ljt	penstkl.lft_id
32	penstkl	penstkl.ljt	edg_id	edg	id
33	penstkl	edg	id	penstkl.ljt	edg_id

TABLE E-165. Content and format for surface drainage coverage feature class schema table (Continued).

34	penstkl	penstkl.ljt	penstkl.lft_id	penstkl.lft	id
35	rapidsl	rapidsl.lft	id	rapidsl.ljt	rapidsl.lft_id
36	rapidsl	rapidsl.ljt	edg_id	edg	id
37	rapidsl	edg	id	rapidsl.ljt	edg_id
38	rapidsl	rapidsl.ljt	rapidsl.lft_id	rapidsl.lft	id
39	chanela	chanela.aft	id	chanela.ajt	chanela.aft_id
40	chanela	chanela.ajt	fac_id	fac	id
41	chanela	fac	id	chanela.ajt	fac_id
42	chanela	chanela.ajt	chanela.aft_id	chanela.aft	id
43	damlocka	damlocka.aft	id	damlocka.ajt	damlocka.aft_id
44	damlocka	damlocka.ajt	fac_id	fac	id
45	damlocka	fac	id	damlocka.ajt	fac_id
46	damlocka	damlocka.ajt	damlocka.aft_id	damlocka.aft	id
47	lakeresa	lakeresa.aft	id	lakeresa.ajt	lakeresa.aft_id
48	lakeresa	lakeresa.ajt	fac_id	fac	id
49	lakeresa	fac	id	lakeresa.ajt	fac_id
50	lakeresa	lakeresa.ajt	lakeresa.aft_id	lakeresa.aft	id
51	misdra	misdra.aft	id	misdra.ajt	misdra.aft_id
52	misdra	misdra.ajt	fac_id	fac	id
53	misdra	fac	id	misdra.ajt	fac_id
54	misdra	misdra.ajt	misdra.aft_id	misdra.aft	id
55	sdrvoida	sdrvoida.aft	id	sdrvoida.ajt	sdrvoida.aft_id
56	sdrvoida	sdrvoida.ajt	fac_id	fac	id
57	sdrvoida	fac	id	sdrvoida.ajt	fac_id
58	sdrvoida	sdrvoida.ajt	sdrvoids.aft_id	sdrvoida.aft	id
59	watera	watera.aft	id	watera.ajt	watera.aft_id
60	watera	watera.ajt	fac_id	fac	id
61	watera	fac	id	watera.ajt	fac_id
62	watera	watera.ajt	watera.aft_id	watera.aft	id
63	sdrtxt	sdrtxt.tft	txt_id	txt	id
64	sdrtxt	txt	id	sdrtxt.tft	txt_id

TABLE E-166. Dam/Lock Point Feature Table.

Thematic Layer: Surface Drainage
Coverage Name: sdr
Feature Table Description: Dam/Lock Point Feature Table
Table Name: damlockp.pft
DQ Layer Number: 8
Portrayal Criteria: For BI020 length < 25 meters, hgt, mcc and wd5 will be collected only if height >= 5 meters. For BI030 width < 25 meters.

```
{Header length}L;
Dam/Lock Point Feature Table;-;
id=I,1,P,Row Identifier,-,-,-,:
f_code=T,5,N,FACC Feature Code,char.vdt,f_code1.pti,-,:
exs=S,1,N,Existence Category,int.vdt,-,-,:
hgt=S,1,N,Height Above Surface Level (meters),int.vdt,-,-,:
len=S,1,N,Length/Diameter (meters),int.vdt,-,-,:
mcc=S,1,N,Material Composition Category,int.vdt,-,-,:
nam=T,*,N,Name,char.vdt,-,-,:
wd5=S,1,N,Width Top (meters),int.vdt,-,-,:
wid=S,1,N,Width (meters),int.vdt,-,-,:
tile_id=S,1,N,Tile Reference ID,-,tile1_id.pti,-,:
end_id=I,1,N,Entity Node Primitive ID,-,end1_id.pti,-,:;
```

Column	Description	Value	Value Meaning	Applicable f_code for Each Attribute Value
id	Row Identifier	Sequential beginning with 1		
f_code	FACC Feature Code			
		BI020	Dam/Weir	
		BI030	Lock	
exs	Existence Category			
		0	Unknown	BI020,BI030
		5	Under Construction	BI020,BI030
		28	Operational	BI020,BI030
hgt	Height Above Surface Level (meters)			
		-32768	Null	BI030
		0	Unknown	BI020
		>= 5		BI020
len	Length/Diameter (meters)			
		-32768	Null	BI020 hgt<5
		0	Unknown	BI020 hgt>=5, BI030
		< 25		BI020 hgt>=5
		> 0		BI030

TABLE E-166. Dam/Lock Point Feature Table (Continued).

mcc	Material Composition Category (some value added)			
		-32768	Null	BI020 hgt<5, BI030
		0	Unknown	BI020 hgt>=5
		20	Composition	BI020 hgt>=5
		21	Concrete	BI020 hgt>=5
		30	Earthen	BI020 hgt>=5
		62	Masonry (Brick/Stone)	BI020 hgt>=5
		107	Steel (value added)	BI020 hgt>=5
		117	Wood (value added)	BI020 hgt>=5
		999	Other	BI020 hgt>=5
nam	Name variable length text=			
		zero-length	Null	BI030
		Character text string		BI020
		UNK (No entry present)		BI020
wd5	Width Top (meters)			
		-32768	Null	BI020 hgt<5, BI030
		0	Unknown	BI020 hgt>=5
		< 100		BI020 hgt>=5
wid	Width (meters)			
		-32768	Null	BI020
		0	Unknown	BI030
		< 25		BI030

TABLE E-167. Intake Point Feature Table.

Thematic Layer: Surface Drainage
Coverage Name: sdr
Feature Table Description: Intake Point Feature Table
Table Name: intakep.pft
DQ Layer Number: 8
Portrayal Criteria: For BI050 width <= 40 meters.

```
{Header length}L;
Intake Point Feature Table;-;
id=I,1,P,Row Identifier,-,-,-,:
f_code=T,5,N,FACC Feature Code,char.vdt,-,-,:
wid=S,1,N,Width (meters),int.vdt,-,-,:
tile_id=S,1,N,Tile Reference ID,-,tile2_id.pti,-,:
end_id=I,1,N,Entity Node Primitive ID,-,end2_id.pti,-
,:;
```

Column	Description	Value	Value Meaning	Applicable f_code for Each Attribute Value
id	Row Identifier	Sequential beginning with 1		
f_code	FACC Feature Code			
		BI050	Water Intake Tower	
wid	Width (meters)			
		0	Unknown	BI050
		<=40		BI050

TABLE E-168. Spring Point Feature Table.

Thematic Layer: Surface Drainage
Coverage Name: sdr
Feature Table Description: Spring Point Feature Table
Table Name: springp.pft
DQ Layer Number: 8
Portrayal Criteria: For BH170 must be a prominent feature.

```
{Header length}L;
Spring Point Feature Table;-;
id=I,1,P,Row Identifier,-,-,-,:
f_code=T,5,N,FACC Feature Code,char.vdt,-,-,:
hyc=S,1,N,Hydrological Category,int.vdt,-,-,:
scc=S,1,N,Spring/Well Characteristic Category,int.vdt,-,-,:
ywq=S,1,N,Water Quality Attribute,int.vdt,-,-,:
tile_id=S,1,N,Tile Reference ID,-,tile3_id.pti,-,:
end_id=I,1,N,Entity Node Primitive ID,-,end3_id.pti,-,:;
```

Column	Description	Value	Value Meaning	Applicable f_code for Each Attribute Value
id	Row Identifier	Sequential beginning with 1		
f_code	FACC Feature Code			
		BH170	Spring/Water-Hole	
hyc	Hydrological Category			
		0	Unknown	BH170
		3	Dry	BH170
		6	Non-Perennial/ Intermittent/ Fluctuating	BH170
		8	Perennial/Permanent	BH170
scc	Spring/Well Characteristic Category			
		0	Unknown	BH170
		1	Alkaline	BH170
		4	Mineral	BH170
		9	Freshwater/Potable	BH170
ywq	Water Quality Attribute (value added)			
		0	Unknown [default]	BH170
		1	Potable	BH170
		2	Treatable	BH170
		3	Contaminated	BH170

TABLE E-169. Dam/Lock Node Feature Table.

Thematic Layer: Surface Drainage
Coverage Name: sdr
Feature Table Description: Dam/Lock Node Feature Table
Table Name: damlockc.pft
DQ Layer Number: 8
Portrayal Criteria: For BI040 must be landmark feature. For BI020 length < 25 meters, hgt, mcc, and wd5 are populated only if height >= 5 meters. For BI030 width < 25 meters.

```
{Header length}L;
Dam/Lock Node Feature Table;-;
id=I,1,P,Row Identifier,-,-,-,:
f_code=T,5,N,FACC Feature Code,char.vdt,f_code1.nti,-,:
exs=S,1,N,Existence Category,int.vdt,-,-,:
hgt=S,1,N,Height Above Surface Level (meters),int.vdt,-,-,:
len=S,1,N,Length/Diameter (meters),int.vdt,-,-,:
mcc=S,1,N,Material Composition Category,int.vdt,-,-,:
nam=T,*,N,Name,char.vdt,-,-,:
wd5=S,1,N,Width Top (meters),int.vdt,-,-,:
wid=S,1,N,Width (meters),int.vdt,-,-,:
tile_id=S,1,N,Tile Reference ID,-,tile1_id.nti,-,:
cnd_id=I,1,N,Connected Node Primitive ID,-,cnd1_id.nti,-,:;
```

Column	Description	Value	Value Meaning	Applicable f_code for Each Attribute Value
id	Row Identifier	Sequential beginning with 1		
f_code	FACC Feature Code			
		BI020	Dam/Weir	
		BI030	Lock	
		BI040	Sluice Gate	
exs	Existence Category			
		-32768	Null	BI040
		0	Unknown	BI020,BI030
		5	Under Construction	BI020,BI030
		28	Operational	BI020,BI030
hgt	Height Above Surface Level (meters)			
		-32768	Null	BI030,BI040
		0	Unknown	BI020
		>= 5		BI020
len	Length/Diameter (meters)			
		-32768	Null	BI020 hgt<5
		0	Unknown	BI020 hgt>=5, BI030,BI040
		< 25		BI020 hgt>=5, BI040
		> 0		BI030

TABLE E-169. Dam/Lock Node Feature Table (Continued).

mcc	Material Composition Category (some value added)			
		-32768	Null	BI020 hgt<5, BI030,BI040
		0	Unknown	BI020 hgt>=5
		20	Composition	BI020 hgt>=5
		21	Concrete	BI020 hgt>=5
		30	Earthen	BI020 hgt>=5
		62	Masonry (Brick/Stone)	BI020 hgt>=5
		107	Steel (value added)	BI020 hgt>=5
		117	Wood (value added)	BI020 hgt>=5
		999	Other	BI020 hgt>=5
nam	Name			
	variable length text=			
		zero-length	Null	BI030,BI040
		Character text string		BI020
		UNK (No entry present)		BI020
wd5	Width Top (meters)			
		-32768	Null	BI020 hgt<5, BI030,BI040
		0	Unknown	BI020 hgt>=5
		< 100		BI020 hgt>=5
wid	Width (meters)			
		-32768	Null	BI020,BI040
		0	Unknown	BI030
		<25		BI030

TABLE E-170. Rapids Node Feature Table.

Thematic Layer: Surface Drainage
Coverage Name: sdr
Feature Table Description: Rapids Node Feature Table
Table Name: rapidsc.pft
DQ Layer Number: 8
Portrayal Criteria: For BH120 must be landmark, BH120 and BH180 must be located on associated linear feature.

```
{Header length}L;
Rapids Node Feature Table;-;
id=I,1,P,Row Identifier,-,-,-,:
f_code=T,5,N,FACC Feature Code,char.vdt,f_code2.nti,-,:
hfc=S,1,N,Hydrological Form Category,int.vdt,-,-,:
nam=T,*,N,Name,char.vdt,-,-,:
tile_id=S,1,N,Tile Reference ID,-,tile2_id.nti,-,:
cnd_id=I,1,N,Connected Node Primitive ID,-,cnd2_id.nti,-,:;
```

Column	Description	Value	Value Meaning	Applicable f_code for Each Attribute Value
id	Row Identifier	Sequential beginning with 1		
f_code	FACC Feature Code			
		BH120	Rapids	
		BH145	River Stream Vanishing Point	
		BH180	Waterfall	
hfc	Hydrological Form Category			
		-32768	Null	BH120,BH180
		0	Unknown	BH145
		2	Disappearing	BH145
		16	Dissipating	BH145
nam	Name			
	Variable length text=			
		zero-length	Null	BH120,BH145
		Character text string		BH180
		UNK (No entry present)		BH180

TABLE E-171. Spring Node Feature Table.

Thematic Layer: Surface Drainage
Coverage Name: sdr
Feature Table Description: Spring Node Feature Table
Table Name: springc.pft
DQ Layer Number: 8
Portrayal Criteria: For BH170 must be a prominent feature.

```
{Header length}L;
Spring Node Feature Table;-;
id=I,1,P,Row Identifier,-,-,-,:
f_code=T,5,N,FACC Feature Code,char.vdt,-,-,:
hyc=S,1,N,Hydrological Category,int.vdt,-,-,:
scc=S,1,N,Spring/Well Characteristic Category,int.vdt,-,-,:
ywq=S,1,N,Water Quality Attribute,int.vdt,-,-,:
tile_id=S,1,N,Tile Reference ID,-,tile3_id.nti,-,:
cnd_id=I,1,N,Connected Node Primitive ID,-,cnd3_id.nti,-,:;
```

Column	Description	Value	Value Meaning	Applicable f_code for Each Attribute Value
id	Row Identifier	Sequential beginning with 1		
f_code	FACC Feature Code			
		BH170	Spring/Water-Hole	
hyc	Hydrological Category			
		0	Unknown	BH170
		3	Dry	BH170
		6	Non-Perennial/ Intermittent/ Fluctuating	BH170
		8	Perennial/Permanent	BH170
scc	Spring/Well Characteristic Category			
		0	Unknown	BH170
		1	Alkaline	BH170
		4	Mineral	BH170
		9	Freshwater/Potable	BH170
ywq	Water Quality Attribute (value added)			
		0	Unknown [default]	BH170
		1	Potable	BH170
		2	Treatable	BH170
		3	Contaminated	BH170

TABLE E-172. Surface Drainage Node Feature Table.

Thematic Layer: Surface Drainage
Coverage Name: sdr
Feature Table Description: Surface Drainage Node Feature Table
Table Name: sdrnode.pft
DQ Layer Number: 8
Portrayal Criteria: For BH070 not associated with portrayed transportation feature, to be considered 'off-road' ford and associated with linear drainage channel features, implying length less than 25 meters.

```
{Header length}L;
Surface Drainage Node Feature Table;-;
id=I,1,P,Row Identifier,-,-,-,:
f_code=T,5,N,FACC Feature Code,char.vdt,f_code4.nti,-,:
tile_id=S,1,N,Tile Reference ID,-,tile4_id.nti,-,:
cnd_id=I,1,N,Connected Node Primitive ID,-,cnd4_id.nti,-,:;
```

Column	Description	Value	Value Meaning	Applicable f_code for Each Attribute Value
id	Row Identifier	Sequential beginning with 1		
f_code	FACC Feature Code			
		AQ111	Prepared Raft or Float Bridge Site	
		BH070	Ford	

TABLE E-173. Channel Line Join Table.

(This table is used to combine linear surface drainage features, with their associated edge primitives in a one-to-many relationship.)

```
{Header length}L;
Channel Line Join Table;-;
id=I,1,P,Row Identifier,-,-,-,:
chanell.lft_id=I,1,N,Feature Key,-,chanell.jti,-,:
tile_id=S,1,N,Tile Reference ID,-,tile1_id.jti,-,:
edg_id=I,1,N,Edge Primitive ID,-,edg1_id.jti,-,:;
```

TABLE E-174. Channel Line Feature Table.

Thematic Layer: Surface Drainage
Coverage Name: sdr
Feature Table Description: Channel Line Feature Table
Table Name: chanell.lft
DQ Layer Number: 8
Portrayal Criteria: For BH020, BH030, and BH140 length >= 300 meters and water width < 25 meters and for BH010 length >= 75 meters.

```
{Header length}L;
Channel Line Feature Table;-;
id=I,1,P,Row Identifier,-,-,-,:
f_code=T,5,N,FACC Feature Code,char.vdt,f_code1.lti,-,:
atc=S,1,N,Aqueduct Type Category,int.vdt,-,-,:
bmc=S,1,N,Bottom Materials Composition,int.vdt,-,-,:
bvl=S,1,N,Bank Vegetation Left,int.vdt,-,-,:
bvr=S,1,N,Bank Vegetation Right,int.vdt,-,-,:
cda=S,1,N,Covered Drain Attribute,int.vdt,-,-,:
dw1=S,1,N,Depth of Water (1),int.vdt,-,-,:
gw1=S,1,N,Gap Width Range (1),int.vdt,-,-,:
hfc=S,1,N,Hydrological Form Category,int.vdt,-,-,:
hl1=S,1,N,Bank Height Left (1),int.vdt,-,-,:
hr1=S,1,N,Bank Height Right (1),int.vdt,-,-,:
hyc=S,1,N,Hydrological Category,int.vdt,-,-,:
loc=S,1,N,Location Category,int.vdt,-,-,:
sl1=S,1,N,Slope Gradient Left (1),int.vdt,-,-,:
sr1=S,1,N,Slope Gradient Right (1),int.vdt,-,-,:
tid=S,1,N,Tidal/Non-Tidal Category,int.vdt,-,-,:
wd3=S,1,N,Military Gap Width,int.vdt,-,-,:
wv1=S,1,N,Water Velocity Average (1),int.vdt,-,-,:
ydh=S,1,N,Water Depth Mean (Seasonal High Water),int.vdt,-,-,:
ydl=S,1,N,Water Depth Mean (Seasonal Low Water),int.vdt,-,-,:
ygw=S,1,N,Gap Width with Greater Precision,int.vdt,-,-,:
yhl=S,1,N,Bank Height Left at Greater Precision,int.vdt,-,-,:
yhr=S,1,N,Bank Height Right at Greater Precision,int.vdt,-,-,:
yvh=S,1,N,Water Velocity Mean (Seasonal High Water),int.vdt,-,-,:
yvl=S,1,N,Water Velocity Mean (Seasonal Low Water),int.vdt,-,-,:;
```

TABLE E-174. Channel Line Feature Table (Continued).

Column	Description	Value	Value Meaning	Applicable f_code for Each Attribute Value
id	Row Identifier	Sequential beginning with 1		
f_code	FACC Feature Code			
		BH010	Aqueduct	
		BH020	Canal	
		BH030	Ditch	
		BH140	River/Stream	
atc	Aqueduct Type Category			
		-32768	Null	BH020,BH030,BH140
		0	Unknown	BH010
		2	Other	BH010
		3	Underground Aqueduct	BH010
bmc	Bottom Materials Composition			
		0	Unknown	BH010,BH020,BH030, BH140
		1	Clay and Silt	BH010,BH020,BH030, BH140
		2	Silty Sands	BH010,BH020,BH030, BH140
		3	Sand and Gravel	BH010,BH020,BH030, BH140
		4	Gravel and Cobble	BH010,BH020,BH030, BH140
		5	Rocks and Boulders	BH010,BH020,BH030, BH140
		6	Bedrock	BH010,BH020,BH030, BH140
		7	Paved	BH010,BH020,BH030, BH140
		8	Peat	BH010,BH020,BH030, BH140
bvl	Bank Vegetation Left			
		0	Unknown	BH010,BH020,BH030, BH140
		2	Sparse (>5%<=15%)	BH010,BH020,BH030, BH140
		4	Dense (>50%)	BH010,BH020,BH030, BH140
bvr	Bank Vegetation Right			
		0	Unknown	BH010,BH020,BH030, BH140
		2	Sparse (>5%<=15%)	BH010,BH020,BH030, BH140
		4	Dense (>50%)	BH010,BH020,BH030, BH140

TABLE E-174. Channel Line Feature Table (Continued).

cda	Covered Drain Attribute			
		0	Unknown	BH010,BH020,BH030, BH140
		1	Uncovered	BH010,BH020,BH030, BH140
		2	Covered	BH010,BH020,BH030, BH140
dw1	Depth of Water (1)		[meters]	
		0	Unknown	BH010,BH020,BH030, BH140
		1	<= 0.8	BH010,BH020,BH030, BH140
		2	> 0.8 and <= 1.6	BH010,BH020,BH030, BH140
		3	> 1.6 and <= 2.4	BH010,BH020,BH030, BH140
		4	> 2.4	BH010,BH020,BH030, BH140
gw1	Gap Width Range (1)		[meters]	
		0	Unknown	BH010,BH020,BH030, BH140
		1	<= 3	BH010,BH020,BH030, BH140
		2	> 3 and <= 18	BH010,BH020,BH030, BH140
		3	> 18 and <= 25	BH010,BH020,BH030, BH140
		4	> 25 and <= 50	BH010,BH020,BH030, BH140
		5	> 50 and <= 75	BH010,BH020,BH030, BH140
		6	> 75 and <= 100	BH010,BH020,BH030, BH140
		7	> 100 and <= 142	BH010,BH020,BH030, BH140
		8	> 142	BH010,BH020,BH030, BH140
hfc	Hydrological Form Category			
		-32768	Null	BH010,BH020,BH030
		0	Unknown	BH140
		1	Channelized Stream	BH140
		8	Normal Channel	BH140
		14	Braided	BH140
		19	Gorge	BH140
		21	Wadi/Wash	BH140

TABLE E-174. Channel Line Feature Table (Continued).

hl1	Bank Height Left (1)		[meters]	
		0	Unknown	BH010,BH020,BH030, BH140
		1	<= .5	BH010,BH020,BH030, BH140
		2	> .5 and <= 1.0	BH010,BH020,BH030, BH140
		3	> 1.0 and <= 5.0	BH010,BH020,BH030, BH140
		4	> 5.0	BH010,BH020,BH030, BH140
hr1	Bank Height Right (1)		[meters]	
		0	Unknown	BH010,BH020,BH030, BH140
		1	<= .5	BH010,BH020,BH030, BH140
		2	> .5 and <= 1.0	BH010,BH020,BH030, BH140
		3	> 1.0 and <= 5.0	BH010,BH020,BH030, BH140
		4	> 5.0	BH010,BH020,BH030, BH140
hyc	Hydrological Category			
		-32768	Null	BH010,BH030
		0	Unknown	BH020,BH140
		3	Dry	BH020,BH140
		6	Non-Perennial/ Intermittent/ Fluctuating	BH140
		8	Perennial/Permanent	BH020,BH140
loc	Location Category			
		-32768	Null	BH020,BH030,BH140
		0	Unknown	BH010
		4	Below Surface /Submerged /Underground	BH010
		8	On Ground Surface	BH010
		25	Suspended/Elevated above Ground or Water Surface	BH010

TABLE E-174. Channel Line Feature Table (Continued).

sl1	Slope Gradient Left (1)		[percent]	
		0	Unknown	BH010,BH020,BH030, BH140
		1	<= 30	BH010,BH020,BH030, BH140
		2	> 30 and <= 45	BH010,BH020,BH030, BH140
		3	> 45 and <= 60	BH010,BH020,BH030, BH140
		4	> 60	BH010,BH020,BH030, BH140
sr1	Slope Gradient Right (1)		[percent]	
		0	Unknown	BH010,BH020,BH030, BH140
		1	<= 30	BH010,BH020,BH030, BH140
		2	> 30 and <= 45	BH010,BH020,BH030, BH140
		3	> 45 and <= 60	BH010,BH020,BH030, BH140
		4	> 60	BH010,BH020,BH030, BH140
tid	Tidal/Non-Tidal Category			
		-32768	Null	BH010,BH020,BH030
		0	Unknown	BH140
		1	Non-Tidal	BH140
		2	Tidal/Tidal Fluctuating	BH140
wd3	Military Gap Width [decimeters] - (used only when VITD derived)			
		0	Unknown [default]	BH010,BH020,BH030, BH140
		20	<= 45 dm (default range)	BH010,BH020,BH030, BH140
		113	> 45 and <= 180 dm (default range)	BH010,BH020,BH030, BH140
wv1	Water Velocity Average (1)		[meters/sec]	
		0	Unknown	BH010,BH020,BH030, BH140
		1	<= 1.5	BH010,BH020,BH030, BH140
		2	> 1.5	BH010,BH020,BH030, BH140

TABLE E-174. Channel Line Feature Table (Continued).

ydh	Water Depth Mean (Seasonal High Water) (value added) [meters]			
		0	Unknown (default)	BH010,BH020,BH030, BH140
		1	<= 0.8	BH010,BH020,BH030, BH140
		2	> 0.8 and <= 1.6	BH010,BH020,BH030, BH140
		3	> 1.6 and <= 2.4	BH010,BH020,BH030, BH140
		4	> 2.4	BH010,BH020,BH030, BH140
ydl	Water Depth Mean (Seasonal Low Water) (value added) [meters]			
		0	Unknown (default)	BH010,BH020,BH030, BH140
		1	<= 0.8	BH010,BH020,BH030, BH140
		2	> 0.8 and <= 1.6	BH010,BH020,BH030, BH140
		3	> 1.6 and <= 2.4	BH010,BH020,BH030, BH140
		4	> 2.4	BH010,BH020,BH030, BH140
ygw	Gap Width with Greater Precision (value added) [meters]			
		0	Unknown (default)	BH010,BH020,BH030, BH140
		1	<= 1.5	BH010,BH020,BH030, BH140
		2	> 1.5 and <= 3.0	BH010,BH020,BH030, BH140
		3	> 3.0 and <= 18.0	BH010,BH020,BH030, BH140
		4	> 18.0 and <= 25.0	BH010,BH020,BH030, BH140
yhl	Bank Height Left at Greater Precision (value added) [meters]			
		0	Unknown (default)	BH010,BH020,BH030, BH140
		1	<= 0.2	BH010,BH020,BH030, BH140
		2	> 0.2 and <= 0.5	BH010,BH020,BH030, BH140
		3	> 0.5 and <= 1.0	BH010,BH020,BH030, BH140
		4	> 1.0 and <= 1.5	BH010,BH020,BH030, BH140
		5	> 1.5 and <= 2.0	BH010,BH020,BH030, BH140
		6	> 2.0 and <= 5.0	BH010,BH020,BH030, BH140
		7	> 5.0	BH010,BH020,BH030, BH140

TABLE E-174. Channel Line Feature Table (Continued).

yhr Bank Height Right at Greater Precision (value added) [meters]

0	Unknown (default)	BH010,BH020,BH030, BH140
1	<= 0.2	BH010,BH020,BH030, BH140
2	> 0.2 and <= 0.5	BH010,BH020,BH030, BH140
3	> 0.5 and <= 1.0	BH010,BH020,BH030, BH140
4	> 1.0 and <= 1.5	BH010,BH020,BH030, BH140
5	> 1.5 and <= 2.0	BH010,BH020,BH030, BH140
6	> 2.0 and <= 5.0	BH010,BH020,BH030, BH140
7	> 5.0	BH010,BH020,BH030, BH140

yvh Water Velocity Mean (Seasonal High Water) (value added) [meters/sec]

0	Unknown (default)	BH010,BH020,BH030, BH140
1	<= 0.5	BH010,BH020,BH030, BH140
2	> 0.5 and <= 1.5	BH010,BH020,BH030, BH140
3	> 1.5 and <= 2.5	BH010,BH020,BH030, BH140
4	> 2.5	BH010,BH020,BH030, BH140

yvl Water Velocity Mean (Seasonal Low Water) (value added) [meters/sec]

0	Unknown (default)	BH010,BH020,BH030, BH140
1	<= 0.5	BH010,BH020,BH030, BH140
2	> 0.5 and <= 1.5	BH010,BH020,BH030, BH140
3	> 1.5 and <= 2.5	BH010,BH020,BH030, BH140
4	> 2.5	BH010,BH020,BH030, BH140

TABLE E-175. Dam Line Join Table.

(This table is used to combine linear surface drainage features with their associated edge primitives in a one-to-many relationship.)

```
{Header length}L;
Dam Line Join Table;-;
id=I,1,P,Row Identifier,-,-,-,:
daml.lft_id=I,1,N,Feature Key,-,daml.jti,-,:
tile_id=S,1,N,Tile Reference ID,-,tile2_id.jti,-,:
edg_id=I,1,N,Edge Primitive ID,-,edg2_id.jti,-,:;
```

TABLE E-176. Dam Line Feature Table

Thematic Layer: Surface Drainage
Coverage Name: sdr
Feature Table Description: Dam Line Feature Table
Table Name: daml.lft
DQ Layer Number: 8
Portrayal Criteria: For BI040 length >= 25 meters. For BI020 length >= 25 meters and width < 25 meters, hgt, mcc, and wd5 are populated if height >= 5meters.

```
{Header length}L;
Dam Line Feature Table;-;
id=I,1,P,Row Identifier,-,-,-,:
f_code=T,5,N,FACC Feature Code,char.vdt,f_code2.lti,-,:
exs=S,1,N,Existence Category,int.vdt,-,-,:
hgt=S,1,N,Height Above Surface Level (meters),int.vdt,-,-,:
len=S,1,N,Length/Diameter (meters),int.vdt,-,-,:
mcc=S,1,N,Material Composition Category,int.vdt,-,-,:
nam=T,*,N,Name,char.vdt,-,-,:
wd5=S,1,N,Width Top (meters),int.vdt,-,-,:;
```

Column	Description	Value	Value Meaning	Applicable f_code for Each Attribute Value
id	Row Identifier	Sequential beginning with 1		
f_code	FACC Feature Code			
		BI020	Dam/Weir	
		BI040	Sluice Gate	
exs	Existence Category			
		-32768	Null	BI040
		0	Unknown	BI020
		5	Under Construction	BI020
		28	Operational	BI020
hgt	Height Above Surface Level (meters)			
		-32768	Null	BI040
		0	Unknown	BI020
		>= 5		BI020

TABLE E-176. Dam Line Feature Table (Continued).

len	Length/Diameter (meters)			
		-32768	Null	BI020 hgt<5
		0	Unknown	BI020 hgt>=5, BI040
		>= 25		BI020 hgt>=5, BI040
mcc	Material Composition Category (some value added)			
		-32768	Null	BI020 hgt<5, BI040
		0	Unknown	BI020 hgt>=5
		20	Composition	BI020 hgt>=5
		21	Concrete	BI020 hgt>=5
		30	Earthen	BI020 hgt>=5
		62	Masonry (Brick/Stone)	BI020 hgt>=5
		107	Steel (value added)	BI020 hgt>=5
		117	Wood (value added)	BI020 hgt>=5
		999	Other	BI020 hgt>=5
nam	Name variable length text=			
		zero-length	Null	BI040
		Character text string		BI020
		UNK (No entry present)		BI020
wd5	Width Top (meters)			
		-32768	Null	BI020 hgt<5, BI040
		0	Unknown	BI020 hgt>=5
		>0		BI020 hgt>=5

TABLE E-177. Ford Line Join Table.

(This table is used to combine linear surface drainage features with their associated edge primitives in a one-to-many relationship.)

```
{Header length}L;
Ford Line Join Table;-;
id=I,1,P,Row Identifier,-,-,-,:
fordl.lft_id=I,1,N,Feature Key,-,fordl.jti,-,:
tile_id=S,1,N,Tile Reference ID,-,tile3_id.jti,-,:
edg_id=I,1,N,Edge Primitive ID,-,edg3_id.jti,-,:;
```

TABLE E-178. Ford Line Feature Table.

Thematic Layer: Surface Drainage
Coverage Name: sdr
Feature Table Description: Ford Line Feature Table
Table Name: fordl.lft
DQ Layer Number: 8
Portrayal Criteria: For BH070 located with area drainage channel and not associated with portrayed transportation feature, length >= 25 meters.

```
{Header length}L;
Ford Line Feature Table;-;
id=I,1,P,Row Identifier,-,-,-,:
f_code=T,5,N,FACC Feature Code,char.vdt,-,-,:;
```

Column	Description	Value	Value Meaning	Applicable f_code for Each Attribute Value
id	Row Identifier	Sequential beginning with 1		
f_code	FACC Feature Code			
		BH070	Ford	

TABLE E-179. Miscellaneous Line Join Table.

(This table is used to combine linear surface drainage features with their associated edge primitives in a one-to-many relationship.)

```
{Header length}L;
Miscellaneous Line Join Table;-;
id=I,1,P,Row Identifier,-,-,-,:
misdrl.lft_id=I,1,N,Feature Key,-,misdrl.jti,-,:
tile_id=S,1,N,Tile Reference ID,-,tile4_id.jti,-,:
edg_id=I,1,N,Edge Primitive ID,-,edg4_id.jti,-,:;
```

TABLE E-180. Miscellaneous Line Feature Table.

Thematic Layer: Surface Drainage
Coverage Name: sdr
Feature Table Description: Miscellaneous Line Feature Table
Table Name: misdrl.lft
DQ Layer Number: 8
Portrayal Criteria: For BH200 use to described military significant drainage features in which no other feature code can be implemented.

```
{Header length}L;
Miscellaneous Line Feature Table;-;
id=I,1,P,Row Identifier,-,-,-,:
f_code=T,5,N,FACC Feature Code,char.vdt,-,-,:
txt=T,*,N,Name,char.vdt,-,-,:;
```

Column	Description	Value	Value Meaning	Applicable f_code for Each Attribute Value
id	Row Identifier	Sequential beginning with 1		
f_code	FACC Feature Code			
		BH200	Miscellaneous Surface Drainage Feature	
txt	Text			
		Character text string		BH200
		UNK (No entry present)		BH200

TABLE E-181. Penstock Line Join Table.

(This table is used to combine linear surface drainage features with their associated edge primitives in a one-to-many relationship.)

```
{Header length}L;
Penstock Line Join Table;-;
id=I,1,P,Row Identifier,-,-,-,:
penstkl.lft_id=I,1,N,Feature Key,-,penstkl.jti,-,:
tile_id=S,1,N,Tile Reference ID,-,tile5_id.jti,-,:
edg_id=I,1,N,Edge Primitive ID,-,edg5_id.jti,-,:;
```

TABLE E-182. Penstock Line Feature Table.

Thematic Layer: Surface Drainage
Coverage Name: sdr
Feature Table Description: Penstock Line Feature Table
Table Name: penstkl.lft
DQ Layer Number: 8
Portrayal Criteria: For BH110 length >= 75 meters or landmark feature.

```
{Header length}L;
Penstock Line Feature Table;-;
id=I,1,P,Row Identifier,-,-,-,:
f_code=T,5,N,FACC Feature Code,char.vdt,-,-,:
len=S,1,N,Length/Diameter (meters),int.vdt,-,-,:
loc=S,1,N,Location Category,int.vdt,-,-,:;
```

Column	Description	Value	Value Meaning	Applicable f_code for Each Attribute Value
id	Row Identifier	Sequential beginning with 1		
f_code	FACC Feature Code			
		BH110	Penstock	
len	Length/Diameter (meters)			
		0	Unknown	BH110
		>0	any value	BH110
loc	Location Category			
		0	Unknown	BH110
		4	Below Surface/Submerged /Underground	BH110
		8	On Ground Surface	BH110
		25	Suspended/Elevated above Ground or Water Surface	BH110

TABLE E-183. Rapids Line Join Table.

(This table is used to combine linear surface drainage features with their associated edge primitives in a one-to-many relationship.)

```
{Header length}L;
Rapids Line Join Table;-;
id=I,1,P,Row Identifier,-,-,-,:
rapidsl.lft_id=I,1,N,Feature Key,-,rapidsl.jti,-,:
tile_id=S,1,N,Tile Reference ID,-,tile6_id.jti,-,:
edg_id=I,1,N,Edge Primitive ID,-,edg6_id.jti,-,:;
```

TABLE E-184. Rapids Line Feature Table.

Thematic Layer: Surface Drainage
Coverage Name: sdr
Feature Table Description: Rapids Line Feature Table
Table Name: rapidsl.lft
DQ Layer Number: 8
Portrayal Criteria: For BH180 and BH120 must be located on associated area feature.

```
{Header length}L;
Rapids Line Feature Table;-;
id=I,1,P,Row Identifier,-,-,-,:
f_code=T,5,N,FACC Feature
Code,char.vdt,f_code6.lti,-,:
nam=T,*,N,Name,char.vdt,-,-,:;
```

Column	Description	Value	Value Meaning	Applicable f_code for Each Attribute Value
id	Row Identifier	Sequential beginning with 1		
f_code	FACC Feature Code			
		BH120	Rapids	
		BH180	Waterfall	
nam	Name			
	Variable length text=			
		zero-length	Null	BH120
		Character text string		BH180
		UNK (No entry present)		BH180

TABLE E-185. Channel Area Join Table.

(This table is used to combine area surface drainage features with their associated face primitives in a one-to-many relationship.)

```
{Header length}L;
Channel Area Join Table;-;
id=I,1,P,Row Identifier,-,-,-,:
chanela.aft_id=I,1,N,Feature Key,-,chanela.jti,-,:
tile_id=S,1,N,Tile Reference ID,-,tile7_id.jti,-,:
fac_id=I,1,N,Face Primitive ID,-,fac7_id.jti,-,:;
```

TABLE E-186. Channel Area Feature Table.

Thematic Layer: Surface Drainage
Coverage Name: sdr
Feature Table Description: Channel Area Feature Table
Table Name: chanela.aft
DQ Layer Number: 8
Portrayal Criteria: For BH020, BH030, and BH140 length >= 300 meters and water width >= 25 meters.

```
{Header length}L;
Channel Area Feature Table;-;
id=I,1,P,Row Identifier,-,-,-,:
f_code=T,5,N,FACC Feature Code,char.vdt,f_code7.ati,-,:
bmc=S,1,N,Bottom Materials Composition,int.vdt,-,-,:
bvl=S,1,N,Bank Vegetation Left,int.vdt,-,-,:
bvr=S,1,N,Bank Vegetation Right,int.vdt,-,-,:
cda=S,1,N,Covered Drain Attribute,int.vdt,-,-,:
dw1=S,1,N,Depth of Water (1),int.vdt,-,-,:
gw1=S,1,N,Gap Width Range (1),int.vdt,-,-,:
hfc=S,1,N,Hydrological Form Category,int.vdt,-,-,:
hl1=S,1,N,Bank Height Left (1),int.vdt,-,-,:
hr1=S,1,N,Bank Height Right (1),int.vdt,-,-,:
hyc=S,1,N,Hydrological Category,int.vdt,-,-,:
sl1=S,1,N,Slope Gradient Left (1),int.vdt,-,-,:
sr1=S,1,N,Slope Gradient Right (1),int.vdt,-,-,:
tid=S,1,N,Tidal/Non-Tidal Category,int.vdt,-,-,:
wd3=S,1,N,Military Gap Width,int.vdt,-,-,:
wv1=S,1,N,Water Velocity Average (1),int.vdt,-,-,:
ydh=S,1,N,Water Depth Mean (Seasonal High Water),int.vdt,-,-,:
ydl=S,1,N,Water Depth Mean (Seasonal Low Water),int.vdt,-,-,:
ygw=S,1,N,Gap Width with Greater Precision,int.vdt,-,-,:
yhl=S,1,N,Bank Height Left at Greater Precision,int.vdt,-,-,:
yhr=S,1,N,Bank Height Right at Greater Precision,int.vdt,-,-,:
yvh=S,1,N,Water Velocity Mean (Seasonal High Water),int.vdt,-,-,:
yvl=S,1,N,Water Velocity Mean (Seasonal Low Water),int.vdt,-,-,:;
```

TABLE E-186. Channel Area Feature Table (Continued).

Column	Description	Value	Value Meaning	Applicable f_code for Each Attribute Value
id	Row Identifier	Sequential beginning with 1		
f_code	FACC Feature Code			
		BH020	Canal	
		BH030	Ditch	
		BH140	River/Stream	
bmc	Bottom Materials Composition			
		0	Unknown	BH020,BH030, BH140
		1	Clay and Silt	BH020,BH030, BH140
		2	Silty Sands	BH020,BH030, BH140
		3	Sand and Gravel	BH020,BH030, BH140
		4	Gravel and Cobble	BH020,BH030, BH140
		5	Rocks and Boulders	BH020,BH030, BH140
		6	Bedrock	BH020,BH030, BH140
		7	Paved	BH020,BH030, BH140
		8	Peat	BH020,BH030, BH140
bvl	Bank Vegetation Left			
		0	Unknown	BH020,BH030, BH140
		2	Sparse (>5%<=15%)	BH020,BH030, BH140
		4	Dense (>50%)	BH020,BH030, BH140
bvr	Bank Vegetation Right			
		0	Unknown	BH020,BH030, BH140
		2	Sparse (>5%<=15%)	BH020,BH030, BH140
		4	Dense (>50%)	BH020,BH030, BH140
cda	Covered Drain Attribute			
		0	Unknown	BH020,BH030, BH140
		1	Uncovered	BH020,BH030, BH140
		2	Covered	BH020,BH030, BH140

TABLE E-186. Channel Area Feature Table (Continued).

dw1	Depth of Water (1) [meters]			
		0	Unknown	BH020,BH030, BH140
		1	<= 0.8	BH020,BH030, BH140
		2	> 0.8 and <= 1.6	BH020,BH030, BH140
		3	> 1.6 and <= 2.4	BH020,BH030, BH140
		4	> 2.4	BH020,BH030, BH140
gw1	Gap Width Range (1) [meters]			
		0	Unknown	BH020,BH030, BH140
		4	> 25 and <= 50	BH020,BH030, BH140
		5	> 50 and <= 75	BH020,BH030, BH140
		6	> 75 and <= 100	BH020,BH030, BH140
		7	> 100 and <= 142	BH020,BH030, BH140
		8	> 142	BH020,BH030, BH140
hfc	Hydrological Form Category			
		-32768	Null	BH020,BH030
		0	Unknown	BH140
		1	Channelized Stream	BH140
		8	Normal Channel	BH140
		14	Braided	BH140
		19	Gorge	BH140
		21	Wadi/Wash	BH140
hl1	Bank Height Left (1) [meters]			
		0	Unknown	BH020,BH030, BH140
		1	<= .5	BH020,BH030, BH140
		2	> .5 and <= 1.0	BH020,BH030, BH140
		3	> 1.0 and <= 5.0	BH020,BH030, BH140
		4	> 5.0	BH020,BH030, BH140

TABLE E-186. Channel Area Feature Table (Continued).

hr1	Bank Height Right (1)		[meters]	
		0	Unknown	BH020,BH030, BH140
		1	<= .5	BH020,BH030, BH140
		2	> .5 and <= 1.0	BH020,BH030, BH140
		3	> 1.0 and <= 5.0	BH020,BH030, BH140
		4	> 5.0	BH020,BH030, BH140
hyc	Hydrological Category			
		-32768	Null	BH030
		0	Unknown	BH020,BH140
		3	Dry	BH020,BH140
		6	Non-Perennial/ Intermittent/ Fluctuating	BH140
		8	Perennial/Permanent	BH020,BH140
sl1	Slope Gradient Left (1)		[percent]	
		0	Unknown	BH020,BH030, BH140
		1	<= 30	BH020,BH030, BH140
		2	> 30 and <= 45	BH020,BH030, BH140
		3	> 45 and <= 60	BH020,BH030, BH140
		4	> 60	BH020,BH030, BH140
sr1	Slope Gradient Right (1)		[percent]	
		0	Unknown	BH020,BH030, BH140
		1	<= 30	BH020,BH030, BH140
		2	> 30 and <= 45	BH020,BH030, BH140
		3	> 45 and <= 60	BH020,BH030, BH140
		4	> 60	BH020,BH030, BH140
tid	Tidal/Non-Tidal Category			
		-32768	Null	BH020,BH030
		0	Unknown	BH140
		1	Non-Tidal	BH140
		2	Tidal/Tidal Fluctuating	BH140

TABLE E-186. Channel Area Feature Table (Continued).

wd3	Military Gap Width [decimeters- used only when VITD derived]		
	0	Unknown (default)	BH020,BH030, BH140
	340	> 180 <= 500 dm (default range)	BH020,BH030, BH140
	750	> 500 <= 1000 dm (default range)	BH020,BH030, BH140
	1210	> 1000 <= 1420 dm (default range)	BH020,BH030, BH140
	1710	> 1420 dm (default range)	BH020,BH030, BH140
wv1	Water Velocity Average (1) [meters/sec]		
	0	Unknown	BH020,BH030, BH140
	1	<= 1.5	BH020,BH030, BH140
	2	> 1.5	BH020,BH030, BH140
ydh	Water Depth Mean (Seasonal High Water) (value added) [meters]		
	0	Unknown (default)	BH020,BH030, BH140
	1	<= 0.8	BH020,BH030, BH140
	2	> 0.8 and <= 1.6	BH020,BH030, BH140
	3	> 1.6 and <= 2.4	BH020,BH030, BH140
	4	> 2.4	BH020,BH030, BH140
ydl	Water Depth Mean (Seasonal Low Water) (value added) [meters]		
	0	Unknown (default)	BH020,BH030, BH140
	1	<= 0.8	BH020,BH030, BH140
	2	> 0.8 and <= 1.6	BH020,BH030, BH140
	3	> 1.6 and <= 2.4	BH020,BH030, BH140
	4	> 2.4	BH020,BH030, BH140

TABLE E-186. Channel Area Feature Table (Continued).

ygw	Gap Width with Greater Precision (value added) [meters]			
		0	Unknown (default)	BH020,BH030, BH140
		5	> 25.0 and <= 30.0	BH020,BH030, BH140
		6	> 30.0 and <= 35.0	BH020,BH030, BH140
		7	> 35.0 and <= 40.0	BH020,BH030, BH140
		8	> 40.0 and <= 45.0	BH020,BH030, BH140
		9	> 45.0 and <= 50.0	BH020,BH030, BH140
		10	> 50.0 and <= 75.0	BH020,BH030, BH140
		11	> 75.0 and <= 100.0	BH020,BH030, BH140
		12	> 100.0 and <= 142.0	BH020,BH030, BH140
		13	> 142.0	BH020,BH030, BH140
yhl	Bank Height Left at Greater Precision (value added) [meters]			
		0	Unknown (default)	BH020,BH030, BH140
		1	<= 0.2	BH020,BH030, BH140
		2	> 0.2 and <= 0.5	BH020,BH030, BH140
		3	> 0.5 and <= 1.0	BH020,BH030, BH140
		4	> 1.0 and <= 1.5	BH020,BH030, BH140
		5	> 1.5 and <= 2.0	BH020,BH030, BH140
		6	> 2.0 and <= 5.0	BH020,BH030, BH140
		7	> 5.0	BH020,BH030, BH140

TABLE E-186. Channel Area Feature Table (Continued).

yhr Bank Height Right at Greater Precision (value added) [meters]

0	Unknown (default)	BH020,BH030, BH140
1	<= 0.2	BH020,BH030, BH140
2	> 0.2 and <= 0.5	BH020,BH030, BH140
3	> 0.5 and <= 1.0	BH020,BH030, BH140
4	> 1.0 and <= 1.5	BH020,BH030, BH140
5	> 1.5 and <= 2.0	BH020,BH030, BH140
6	> 2.0 and <= 5.0	BH020,BH030, BH140
7	> 5.0	BH020,BH030, BH140

yvh Water Velocity Mean (Seasonal High Water) (value added) [meters/sec]

0	Unknown (default)	BH020,BH030, BH140
1	<= 0.5	BH020,BH030, BH140
2	> 0.5 and <= 1.5	BH020,BH030, BH140
3	> 1.5 and <= 2.5	BH020,BH030, BH140
4	> 2.5	BH020,BH030, BH140

yvl Water Velocity Mean (Seasonal Low Water) (value added) [meters/sec]

0	Unknown (default)	BH140
1	<= 0.5	BH020,BH030, BH140
2	> 0.5 and <= 1.5	BH020,BH030, BH140
3	> 1.5 and <= 2.5	BH020,BH030, BH140
4	> 2.5	BH020,BH030, BH140

TABLE E-187. Dam/Lock Area Join Table.

(This table is used to combine area surface drainage features with their associated face primitives in a one-to-many relationship.)

```
{Header length}L;
Dam/Lock Area Join Table;-;
id=I,1,P,Row Identifier,-,-,-,:
damlocka.aft_id=I,1,N,Feature Key,-,damlocka.jti,-,:
tile_id=S,1,N,Tile Reference ID,-,tile8_id.jti,-,:
fac_id=I,1,N,Face Primitive ID,-,fac8_id.jti,-,:;
```

TABLE E-188. Dam/Lock Area Feature Table.

Thematic Layer: Surface Drainage
Coverage Name: sdr
Feature Table Description: Dam/Lock Area Feature Table
Table Name: damlocka.aft
DQ Layer Number: 8
Portrayal Criteria: For BI050 width > 40 meters and For BI020 width(base) >= 25 meters with hgt, mcc, and wd5 being populated if height >= 5 meters, and for BI030 width >= 25 meters.

```
{Header length}L;
Dam/Lock Area Feature Table;-;
id=I,1,P,Row Identifier,-,-,-,:
f_code=T,5,N,FACC Feature Code,char.vdt,f_code8.ati,-,:
exs=S,1,N,Existence Category,int.vdt,-,-,:
hgt=S,1,N,Height Above Surface Level (meters),int.vdt,-
,-,:
len=S,1,N,Length/Diameter (meters),int.vdt,-,-,:
mcc=S,1,N,Material Composition Category,int.vdt,-,-,:
nam=T,*,N,Name,char.vdt,-,-,:
wd5=S,1,N,Width Top (meters),int.vdt,-,-,:
wid=S,1,N,Width (meters),int.vdt,-,-,:;
```

Column	Description	Value	Value Meaning	Applicable f_code for Each Attribute Value
id	Row Identifier	Sequential beginning with 1		
f_code	FACC Feature Code			
		BI020	Dam/Weir	
		BI030	Lock	
		BI050	Water Intake Tower	
exs	Existence Category			
		-32768	Null	BI050
		0	Unknown	BI020,BI030
		5	Under Construction	BI020,BI030
		28	Operational	BI020,BI030

TABLE E-188. Dam/Lock Area Feature Table (Continued).

hgt	Height Above Surface Level (meters)			
		-32768	Null	BI030,BI050
		0	Unknown	BI020
		>= 5		BI020
len	Length/Diameter (meters)			
		-32768	Null	BI020 hgt<5, BI050
		0	Unknown	BI020 hgt>=5, BI030
		>0		BI020 hgt>=5, BI030
mcc	Material Composition Category (some value added)			
		-32768	Null	BI020 hgt<5, BI030,BI050
		0	Unknown	BI020 hgt>=5
		20	Composition	BI020 hgt>=5
		21	Concrete	BI020 hgt>=5
		30	Earthen	BI020 hgt>=5
		62	Masonry (Brick/Stone)	BI020 hgt>=5
		107	Steel (value added)	BI020 hgt>=5
		117	Wood (value added)	BI020 hgt>=5
		999	Other	BI020 hgt>=5
nam	Name variable length text=			
		zero-length	Null	BI030,BI050
		Character text string		BI020
		UNK (No entry present)		BI020
wd5	Width Top (meters)			
		-32768	Null	BI020 hgt<5, BI030,BI050
		0	Unknown	BI020 hgt>=5
		>0		BI020 hgt>=5
wid	Width (meters)			
		-32768	Null	BI020
		0	Unknown	BI030,BI050
		>= 25		BI030
		> 40		BI050

TABLE E-189. Lake Reservoir Area Join Table.

(This table is used to combine area surface drainage features with their associated face primitives in a one-to-many relationship.)

```
{Header length}L;
Lake Reservoir Area Join Table;-;
id=I,1,P,Row Identifier,-,-,-,:
lakeresa.aft_id=I,1,N,Feature Key,-,lakeresa.jti,-,:
tile_id=S,1,N,Tile Reference ID,-,tile9_id.jti,-,:
fac_id=I,1,N,Face Primitive ID,-,fac9_id.jti,-,:;
```

TABLE E-190. Lake Reservoir Area Feature Table.

Thematic Layer: Surface Drainage
Coverage Name: sdr
Feature Table Description: Lake Reservoir Area Feature Table
Table Name: lakeresa.aft
DQ Layer Number: 8
Portrayal Criteria: For BH080 and BH130 area >= 2,500 square meters.

```
{Header length}L;
Lake Reservoir Area Feature Table;-;
id=I,1,P,Row Identifier,-,-,-,:
f_code=T,5,N,FACC Feature Code,char.vdt,f_code9.ati,-,:
hyc=S,1,N,Hydrological Category,int.vdt,-,-,:
nam=T,*,N,Name,char.vdt,-,-,:;
```

Column	Description	Value	Value Meaning	Applicable f_code for Each Attribute Value
id	Row Identifier	Sequential beginning with 1		
f_code	FACC Feature Code			
		BH080	Lake/Pond	
		BH130	Reservoir	
hyc	Hydrological Category			
		0	Unknown	BH080,BH130
		6	Non-Perennial/ Intermittent/ Fluctuating	BH080
		8	Perennial/Permanent	BH080,BH130
nam	Name			
		Character text string		BH080,BH130
		UNK (No entry present)		BH080,BH130

TABLE E-191. Miscellaneous Area Join Table.

(This table is used to combine area surface drainage features with their associated face primitives in a one-to-many relationship.)

```
{Header length}L;
Miscellaneous Area Join Table;-;
id=I,1,P,Row Identifier,-,-,-,:
misdra.aft_id=I,1,N,Feature Key,-,misdra.jti,-,:
tile_id=S,1,N,Tile Reference ID,-,til10_id.jti,-,:
fac_id=I,1,N,Face Primitive ID,-,fac10_id.jti,-,:;
```

TABLE E-192. Miscellaneous Area Feature Table.

Thematic Layer: Surface Drainage
Coverage Name: sdr
Feature Table Description: Miscellaneous Area Feature Table
Table Name: misdra.aft
DQ Layer Number: 8
Portrayal Criteria: For BH200 use to described military significant drainage features in which no other feature code can be implemented.

```
{Header length}L;
Miscellaneous Area Feature Table;-;
id=I,1,P,Row Identifier,-,-,-,:
f_code=T,5,N,FACC Feature Code,char.vdt,-,-,:
txt=T,*,N,Name,char.vdt,-,-,:;
```

Column	Description	Value	Value Meaning	Applicable f_code for Each Attribute Value
id	Row Identifier	Sequential beginning with 1		
f_code	FACC Feature Code			
		BH200	Miscellaneous Surface Drainage Feature	
txt	Text			
		Character text string		BH200
		UNK (No entry present)		BH200

TABLE E-193. Surface Drainage Void Collection Area Join Table.
(This table is used to combine area surface drainage features with their associated face primitives in a one-to-many relationship.)

```
{Header length}L;
Surface Drainage Void Collection Area Join Table;-;
id=I,1,P,Row Identifier,-,-,-,:
sdrvoida.aft_id=I,1,N,Feature Key,-,sdrvoida.jti,-,:
tile_id=S,1,N,Tile Reference ID,-,til11_id.jti,-,:
fac_id=I,1,N,Face Primitive ID,-,fac11_id.jti,-,:;
```

TABLE E-194. Surface Drainage Void Collection Area Feature Table.

Thematic Layer: Surface Drainage
Coverage Name: sdr
Feature Table Description: Surface Drainage Void Collection Area Feature Table
Table Name: sdrvoida.aft
DQ Layer Number: 8
Portrayal Criteria: For ZD020 area >= 15,625 square meters.

```
{Header length}L;
Surface Drainage Void Collection Area Feature Table;-;
id=I,1,P,Row Identifier,-,-,-,:
f_code=T,5,N,FACC Feature Code,char.vdt,-,-,:
vca=S,1,N,Void Collection Attribute,int.vdt,-,-,:;
```

Column	**Description**	**Value**	**Value Meaning**	**Applicable f_code for Each Attribute Value**
id	Row Identifier	Sequential beginning with 1		
f_code	FACC Feature Code			
		ZD020	Void Collection Area	
vca	Void Collection Attribute			
		0	Unknown	ZD020
		2	Area Too Rough to Collect	ZD020
		3	No Available Imagery	ZD020
		6	No Available Map Source	ZD020
		7	No Suitable Imagery	ZD020

TABLE E-195. Water Area Join Table.

(This table is used to combine area surface drainage features with their associated face primitives in a one-to-many relationship.)

```
{Header length}L;
Water Area Join Table;-;
id=I,1,P,Row Identifier,-,-,-,:
watera.aft_id=I,1,N,Feature Key,-,watera.jti,-,:
tile_id=S,1,N,Tile Reference ID,-,til12_id.jti,-,:
fac_id=I,1,N,Face Primitive ID,-,fac12_id.jti,-,:;
```

TABLE E-196. Water Area Feature Table.

Thematic Layer: Surface Drainage
Coverage Name: sdr
Feature Table Description: Water Area Feature Table
Table Name: watera.aft
DQ Layer Number: 8
Portrayal Criteria: For AC030, BA040, BH090, and BH155 area >= 15,625 square meters, for BH040 and BH050 width >= 75 meters and area >= 5625 square meters, and BA030 area >= 5,000 square meters.

```
{Header length}L;
Water Area Feature Table;-;
id=I,1,P,Row Identifier,-,-,-,:
f_code=T,5,N,FACC Feature Code,char.vdt,f_code12.ati,-,:;
```

Column	Description	Value	Value Meaning	Applicable f_code for Each Attribute Value
id	Row Identifier	Sequential beginning with 1		
f_code	FACC Feature Code			
		AC030	Settling Basin/Sludge Pond	
		BA030	Island	
		BA040	Water (Except Inland)	
		BH040	Filtration Beds/Aeration Beds	
		BH050	Fish Hatchery/Fish Farm/Marine Farm	
		BH090	Land Subject to Inundation	
		BH155	Salt Evaporator	

TABLE E-197. Surface Drainage Text Feature Table.

Thematic Layer: Surface Drainage
Coverage Name: sdr
Feature Table Description: Surface Drainage Text Feature Table
Table Name: sdrtxt.tft
DQ Layer Number: 8

```
{Header length}L;
Surface Drainage Text Feature Table;-;
id=I,1,P,Row Identifier,-,-,-,:
f_code=T,5,N,FACC Feature Code,char.vdt,f_code.tti,-
,:
tile_id=S,1,N,Tile Reference ID,-,tile_id.tti,-,:
txt_id=I,1,N,Text Primitive ID,-,txt_id.tti,-,:;
```

Column	Description	Value	Value Meaning	Applicable f_code for Each Attribute Value
id	Row Identifier	Sequential beginning with 1		
f_code	FACC Feature Code			
		ZD040	Named Location	
		ZD045	Text Description	

TABLE E-198. Surface Drainage Feature Class Attribute Table.

Thematic Layer: Surface Drainage
Coverage Name: sdr
Table Description: Surface Drainage Feature Class Attribute Table
Table Name: fca
DQ Layer Number: 8

```
{Header length}L;
Surface Drainage Feature Class Attribute Table;-;
id=I,1,P,Row Identifier,-,-,-,:
fclass=T,8,U,Feature Class Name,-,-,-,:
type=T,1,N,Feature Type,char.vdt,-,-,:
descr=T,*,N,Description,-,-,-,:;
```

Column	Description	Value	Value Meaning	Applicable Feature Class for Each Attribute Value
id	Row Identifier	Sequential beginning with 1		
fclass	Feature Class Name			
		damlockp		
		intakep		
		springp		
		damlockc		
		rapidsc		
		sdrnode		
		springc		
		chanell		
		daml		
		fordl		
		misdrl		
		penstkl		
		rapidsl		
		chanela		
		damlocka		
		lakeresa		
		misdra		
		sdrvoida		
		watera		
		sdrtxt		
type	Feature Type			
		P	Point/Node Feature	damlockp, intakep, springp, damlockc, sdrnode, rapidsc, springc
		L	Line Feature	chanell, daml, fordl, misdrl, penstkl, rapidsl
		A	Area Feature	chanela, damlocka, lakeresa, misdra, sdrvoida, watera
		T	Text Feature	sdrtxt

TABLE E-198. Surface Drainage Feature Class Attribute Table (Continued).

descr	Description		
		Dam/Lock Point Features	damlockp
		Intake Point Features	intakep
		Spring Point Feature	springp
		Dam/Lock Node Features	damlockc
		Rapids Node Feature	rapidsc
		Surface Drainage Node Feature	sdrnode
		Spring Node Feature	springc
		Channel Line Feature	chanell
		Dam Line Feature	daml
		Ford Line Feature	fordl
		Miscellaneous Line Feature	misdrl
		Penstock Line Feature	penstkl
		Rapids Line Feature	rapidsl
		Channel Area Feature	chanela
		Dam/Lock Area Feature	damlocka
		Lake Reservoir Area Feature	lakeresa
		Miscellaneous Area Feature	misdra
		Surface Drainage Void Collection Area Feature	sdrvoida
		Water Area Feature	watera
		Surface Drainage Coverage Text Feature	sdrtxt

TABLE E-199. Surface Drainage Character Value Description Table.

Thematic Layer: Surface Drainage
Coverage Name: sdr
Feature Table Description: Surface Drainage Character Value Description Table
Table Name: char.vdt
DQ Layer Number: 8

{Header length}L;
Surface Drainage Character Value Description Table;-;
id=I,1,P,Row Identifier,-,-,-,:
table=T,12,N,Name of the Feature Table,-,-,-,:
attribute=T,6,N,Column Name,-,-,-,:
value=T,5,N,Unique Value of Attribute,-,-,-,:
description=T,*,N,Description of Value,-,-,-,:;

1	damlockp.pft	f_code	BI020	Dam/Weir
2	damlockp.pft	f_code	BI030	Lock
3	damlockp.pft	nam	UNK	No entry present
4	intakep.pft	f_code	BI050	Water Intake Tower
5	springp.pft	f_code	BH170	Spring/Water-Hole
6	damlockc.pft	f_code	BI020	Dam/Weir
7	damlockc.pft	f_code	BI030	Lock
8	damlockc.pft	f_code	BI040	Sluice Gate
9	damlockc.pft	nam	UNK	No entry present
10	rapidsc.pft	f_code	BH120	Rapids
11	rapidsc.pft	f_code	BH145	River Stream Vanishing Point
12	rapidsc.pft	f_code	BH180	Waterfall
13	rapidsc.pft	nam	UNK	No entry present
14	sdrnode.pft	f_code	AQ111	Prepared Raft or Float Bridge Site
15	sdrnode.pft	f_code	BH070	Ford
16	springc.pft	f_code	BH170	Spring/Water-Hole
17	chanell.lft	f_code	BH010	Aqueduct
18	chanell.lft	f_code	BH020	Canal
19	chanell.lft	f_code	BH030	Ditch
20	chanell.lft	f_code	BH140	River/Stream
21	daml.lft	f_code	BI020	Dam/Weir
22	daml.lft	f_code	BI040	Sluice Gate
23	daml.lft	nam	UNK	No entry present
24	fordl.lft	f_code	BH070	Ford
25	misdrl.lft	f_code	BH200	Miscellaneous Surface Drainage Feature
26	misdrl.lft	txt	UNK	No entry present
27	penstk.lft	f_code	BH110	Penstock
28	rapidsl.lft	f_code	BH120	Rapids
29	rapidsl.lft	f_code	BH180	Waterfall
30	rapidsl.lft	nam	UNK	No entry present
31	chanela.aft	f_code	BH020	Canal
32	chanela.aft	f_code	BH030	Ditch
33	chanela.aft	f_code	BH140	River/Stream
34	damlocka.aft	f_code	BI020	Dam/Weir

TABLE E-199. Surface Drainage Character Value Description Table.

35	damlocka.aft	f_code	BI030	Lock
36	damlocka.aft	f_code	BI050	Water Intake Tower
37	damlocka.aft	nam	UNK	No entry present
38	lakeresa.aft	f_code	BH080	Lake/Pond
39	lakeresa.aft	f_code	BH130	Reservoir
40	lakeresa.aft	nam	UNK	No entry present
41	misdra.aft	f_code	BH200	Miscellaneous Surface Drainage Feature
42	misdra.aft	txt	UNK	No entry present
43	sdrvoida.aft	f_code	ZD020	Void Collection Area
44	watera.aft	f_code	AC030	Settling Basin/Sludge Pond
45	watera.aft	f_code	BA030	Island
46	watera.aft	f_code	BA040	Water (Except Inland)
47	watera.aft	f_code	BH040	Filtration Beds/Aeration Beds
48	watera.aft	f_code	BH050	Fish Hatchery/Fish Farm/Marine Farm
49	watera.aft	f_code	BH090	Land Subject to Inundation
50	watera.aft	f_code	BH155	Salt Evaporator
51	sdrtxt.tft	f_code	ZD040	Named Location
52	sdrtxt.tft	f_code	ZD045	Text Description
53	fca	type	A	Area Feature
54	fca	type	L	Line Feature
55	fca	type	P	Point/Node Feature
56	fca	type	T	Text Feature

E.3.10.1 Surface Drainage coverage glossary.

AC030 Settling Basin/Sludge Pond (A) A site where solid matter is precipitated from a liquid by evaporating or settling.

AQ111 Prepared Raft or Float Bridge Site (N) Site on a river or canal which has ramp, piling, and/or pier structures constructed on one or both shores to allow for suitable future crossing operations using float bridge or rafting equipment.

BA030 Island (A) A land mass smaller than a continent and surrounded by water.

BA040 Water (Except Inland) (A) An area of water which normally has tidal fluctuations.

BH010 Aqueduct (L) A pipe or artificial channel designed to transport water from a remote source, usually by gravity. (See also BH110)
ATC Aqueduct Type Category (L) Type of aqueduct.
BMC Bottom Materials Composition (L) Predominant material composition of the bottom of a body of water.
BVL Bank Vegetation Left (L) Density of vegetation found on the downstream left bank.
BVR Bank Vegetation Right (L) Density of vegetation found on the downstream right bank.
CDA Covered Drain Attribute (L) Condition where an artificial or improved natural drainage way is completely covered over and connects open drainage ways at each end.
DW1 Depth of Water(1) (L) Predominant water depth within delineation of feature, determined in meters at the greatest depth along a cross section of the feature (First Range).
GW1 Gap Width Range (1) (L) Predominant horizontal gap width range(1) in meters, measured between the top of the first accessible break in slope above mean water level on each bank. In this product water width will be used for delineation. Gap width will be used for segmentation.
HL1 Bank Height Left(1) (L) Predominant height range(1) of the left bank (facing downstream) in meters, measured from mean water level to the first break in slope above the mean water level.
HR1 Bank Height Right(1) (L) Predominant height range(1) of the right bank (facing downstream) in meters, measured from mean water level to the first break in slope above the mean water level.
LOC Location Category (L) Status of feature relative to surrounding area or water.
SL1 Slope Gradient Left(1) (L) Predominant slope range(1) of the left bank (facing down stream) in percent, measured from mean water level to the first accessible break in slope above the mean water level.
SR1 Slope Gradient Right(1) (L) Predominant slope range(1) of the right bank (facing down stream) in percent, measured from mean water level to the first accessible break in slope above the mean water level.
WD3 Military Gap Width (L) The minimum horizontal bridging distance between banks (in meters).
WV1 Water Velocity Average (1) (L) Range of water velocity, estimated in meters/second within delineation of feature exclusive of high water due to runoff or low water due to drought.

YDL Water Depth Mean (Seasonal Low Water) (L) Range of seasonal mean low water depth (meters).
YDH Water Depth Mean (Seasonal High Water) (L) Range of seasonal mean high water depth (meters).

BH010 Aqueduct (Continued):

YGW Gap Width with Greater Precision (L) Value indicating range of precise gap width (meters).
YHL Bank Height Left at Greater Precision (L) Value indicating range of bank height (meters) left (precise).
YHR Bank Height Right at Greater Precision (L) Value indicating range of bank height (meters) right (precise).
YVH Water Velocity Mean (Seasonal High Water)(L) Range of seasonal mean high water velocity (meters/second).
YVL Water Velocity Mean (Seasonal Low Water) (L) Range of seasonal mean low water velocity (meters/second).

BH020 Canal (L,A) A manmade or improved natural waterway used for transportation.
BMC Bottom Materials Composition (L,A) Predominant material composition of the bottom of a body of water.
BVL Bank Vegetation Left (L,A) Density of vegetation found on the downstream left bank.
BVR Bank Vegetation Right (L,A) Density of vegetation found on the downstream right bank.
CDA Covered Drain Attribute (L,A) Condition where an artificial or improved natural drainage way is completely covered over and connects open drainage ways at each end.
DW1 Depth of Water(1) (L,A) Predominant water depth within delineation of feature, determined in meters at the greatest depth along a cross section of the feature (First Range).
GW1 Gap Width Range (1) (L,A) Predominant horizontal gap width range(1) in meters, measured between the top of the first accessible break in slope above mean water level on each bank. In this product water width will be used for delineation. Gap width will be used for segmentation.
HL1 Bank Height Left(1) (L,A) Predominant height range(1) of the left bank (facing downstream) in meters, measured from mean water level to the first break in slope above the mean water level.
HR1 Bank Height Right(1) (L,A) Predominant height range(1) of the right bank (facing downstream) in meters, measured from mean water level to the first break in slope above the mean water level.
HYC Hydrological Category (L,A) Identifies the annual water content of the feature.
SL1 Slope Gradient Left(1) (L,A) Predominant slope range(1) of the left bank (facing down stream) in percent, measured from mean water level to the first accessible break in slope above the mean water level.
SR1 Slope Gradient Right(1)(L,A) Predominant slope range(1) of the right bank (facing down stream) in percent, measured from mean water level to the first accessible break in slope above the mean water level.
WD3 Military Gap Width (L,A) The minimum horizontal bridging distance between banks (in decimeters).

WV1 Water Velocity Average (1) (L,A) Range of water velocity, estimated in meters/second within delineation of feature exclusive of high water due to runoff or low water due to drought.
YDL Water Depth Mean (Seasonal Low Water) (L,A) Range of seasonal mean low water depth (meters).
YDH Water Depth Mean (Seasonal High Water) (L,A) Range of seasonal mean high water depth (meters).
YGW Gap Width with Greater Precision (L,A) Value indicating range of precise gap width (meters).
YHL Bank Height Left at Greater Precision (L,A) Value indicating range of bank height (meters) left (precise).

BH020 Canal (Continued)

YHR Bank Height Right at Greater Precision (L,A) Value indicating range of bank height (meters) right (precise).
YVH Water Velocity Mean (Seasonal High Water)(L,A) Range of seasonal mean high water velocity (meters/second).
YVL Water Velocity Mean (Seasonal Low Water) (L,A) Range of seasonal mean low water velocity (meters/second).

BH030 Ditch (L,A) A channel constructed for the purpose of irrigation or drainage.
BMC Bottom Materials Composition (L,A) Predominant material composition of the bottom of a body of water.
BVL Bank Vegetation Left (L,A) Density of vegetation found on the downstream left bank.
BVR Bank Vegetation Right (L,A) Density of vegetation found on the downstream right bank.
CDA Covered Drain Attribute (L,A) Condition where an artificial or improved natural drainage way is completely covered over and connects open drainage ways at each end.
DW1 Depth of Water(1) (L,A) Predominant water depth within delineation of feature, determined in meters at the greatest depth along a cross section of the feature (First Range).
GW1 Gap Width Range (1) (L,A) Predominant horizontal gap width range(1) in meters, measured between the top of the first accessible break in slope above mean water level on each bank. In this product water width will be used for delineation. Gap width will be used for segmentation.
HL1 Bank Height Left(1) (L,A) Predominant height range(1) of the left bank (facing downstream) in meters, measured from mean water level to the first break in slope above the mean water level.
HR1 Bank Height Right(1) (L,A) Predominant height range(1) of the right bank (facing downstream) in meters, measured from mean water level to the first break in slope above the mean water level.
SL1 Slope Gradient Left(1) (L,A) Predominant slope range(1) of the left bank (facing down stream) in percent, measured from mean water level to the first accessible break in slope above the mean water level.
SR1 Slope Gradient Right(1)(L,A) Predominant slope range(1) of the right bank (facing down stream) in percent, measured from mean water level to the first accessible break in slope above the mean water level.
WD3 Military Gap Width (L,A) The minimum horizontal bridging distance between banks (in decimeters).

WV1 Water Velocity Average (1) (L,A) Range of water velocity, estimated in meters/second within delineation of feature exclusive of high water due to runoff or low water due to drought.
YDL Water Depth Mean (Seasonal Low Water) (L,A) Range of seasonal mean low water depth (meters).
YDH Water Depth Mean (Seasonal High Water) (L,A) Range of seasonal mean high water depth (meters).
YGW Gap Width with Greater Precision (L,A) Value indicating range of precise gap width (meters).
YHL Bank Height Left at Greater Precision (L,A) Value indicating range of bank height (meters) left (precise).
YHR Bank Height Right at Greater Precision (L,A) Value indicating range of bank height (meters) right (precise).
YVH Water Velocity Mean (Seasonal High Water)(L,A) Range of seasonal mean high water velocity (meters/second).
YVL Water Velocity Mean (Seasonal Low Water) (L,A) Range of seasonal mean low water velocity (meters/second).

BH040 Filtration Beds/Aeration Beds (A) An area containing layers of material used to filter or aerate water.

BH050 Fish Hatchery/Fish Farm/Marine Farm (A) An enclosure of water for the breeding and/or rearing of fish.

BH070 Ford (N,L) A shallow place in a body of water used as a crossing.

BH080 Lake/Pond (A) A body of water surrounded by land. (See also BH130)
HYC Hydrological Category (A) Identifies the annual water content of the feature.
NAM Name (A) Any Identifier or code.

BH090 Land Subject to Inundation (A) An area periodically covered by flood water, excluding tidal waters. (See also BH095)

BH110 Penstock (L) A pipeline or channel generally used by hydroelectric plants or water mills to transport water by gravity or under pressure. (See also BH010)
LEN Length/Diameter (meters) (L) A measurement of the longest of two axes in meters. For a square feature, measure either axis.
LOC Location Category (L) Status of feature relative to surrounding area or water.

BH120 Rapids (N,L) A place in a stream or river where the current is swift and the surface is usually broken by boulders and rocks.

BH130 Reservoir (A) A man made open enclosure or area formed for the storage of water. (See also BH080)
HYC Hydrological Category (A) Identifies the annual water content of the feature.
NAM Name (A) Any Identifier or code.

BH140 River/Stream (L,A) A natural flowing watercourse.
BMC Bottom Materials Composition (L,A) Predominant material composition of the bottom of a body of water.

BVL Bank Vegetation Left (L,A) Density of vegetation found on the downstream left bank.
BVR Bank Vegetation Right (L,A) Density of vegetation found on the downstream right bank.
CDA Covered Drain Attribute (L,A) Condition where an artificial or improved natural drainage way is completely covered over and connects open drainage ways at each end.
DW1 Depth of Water(1) (L,A) Predominant water depth within delineation of feature, determined in meters at the greatest depth along a cross section of the feature (First Range).
GW1 Gap Width Range (1) (L,A) Predominant horizontal gap width range(1) in meters, measured between the top of the first accessible break in slope above mean water level on each bank. In this product water width will be used for delineation. Gap width will be used for segmentation.
HFC Hydrological Form Category (L,A) Form or configuration of the feature.
HL1 Bank Height Left(1) (L,A) Predominant height range(1) of the left bank (facing downstream) in meters, measured from mean water level to the first break in slope above the mean water level.
HR1 Bank Height Right(1) (L,A) Predominant height range(1) of the right bank (facing downstream) in meters, measured from mean water level to the first break in slope above the mean water level.
HYC Hydrological Category (L,A) Identifies the annual water content of the feature.

BH140 River/Stream (Continued)

SL1 Slope Gradient Left(1) (L,A) Predominant slope range(1) of the left bank (facing down stream) in percent, measured from mean water level to the first accessible break in slope above the mean water level.
SR1 Slope Gradient Right(1)(L,A) Predominant slope range(1) of the right bank (facing down stream) in percent, measured from mean water level to the first accessible break in slope above the mean water level.
TID Tidal/Non-Tidal Category (L,A) Identifies whether a feature is affected by a tidal water.
WD3 Military Gap Width (L,A) The minimum horizontal bridging distance between banks (in decimeters).
WV1 Water Velocity Average (1) (L,A) Range of water velocity, estimated in meters/second within delineation of feature exclusive of high water due to runoff or low water due to drought.
YDH Water Depth Mean (Seasonal High Water) (L,A) Range of seasonal mean high water depth (meters).
YDL Water Depth Mean (Seasonal Low Water) (L,A) Range of seasonal mean low water depth (meters).
YGW Gap Width with Greater Precision (L,A) Value indicating range of precise gap width (meters).
YHL Bank Height Left at Greater Precision (L,A) Value indicating range of bank height (meters) left (precise).
YHR Bank Height Right at Greater Precision (L,A) Value indicating range of bank height (meters) right (precise).
YVH Water Velocity Mean (Seasonal High Water)(L,A) Range of seasonal mean high water velocity (meters/second).
YVL Water Velocity Mean (Seasonal Low Water) (L,A) Range of seasonal mean low water velocity (meters/second).

BH145 River Stream Vanishing Point (N) Point at which a river or stream passes into the ground.
HFC Hydrological Form Category (N) Form or configuration of the feature.

BH155 Salt Evaporator (A) Shallow Pools, normally man made, used for natural evaporation of water for the collection of salt.

BH170 Spring/Water-Hole (P,N) A natural outflow of water from below the ground surface. (See also AA050)
HYC Hydrological Category (P,N) Identifies the annual water content of the feature.
SCC Spring/Well Characteristic Category (P,N) Type of available Water.
YWQ Water Quality Attribute (P,N) Description of the drinking quality of water.

BH180 Waterfall (L,N) A vertical or nearly vertical descent of water.
NAM Name (L,N) Any Identifier or code.

BH200 Miscellaneous Surface Drainage Feature (L,A) Surface drainage feature which is of a minor nature and which is not included in other feature codings in this specification.
TXT Text Attribute (L,A) Narrative or other description.

BI020 Dam/Weir (P,N,L,A) A permanent barrier across a watercourse used to impound water or to control its flow.
EXS Existence Category (P,N,L,A) The state or condition of the feature.
HGT Height Above Surface Level (meters) (P,N,L,A) Distance measured from the lowest point of the base at ground or water level (downhill side/downstream side) to the tallest point of the feature.
LEN Length/Diameter (meters) (P,N,L,A) A measurement of the longer of two linear axes in meters. For a square feature, measure either axis.
MCC Material Composition Category (P,N,L,A) Characteristics of primary material composition of feature.
NAM Name (P,N,L,A) Any name or identifier.
WD5 Width Top (meters) (P,N,L,A) The width at the top of a feature (in meters).

BI030 Lock (P,N,A) An enclosure with a pair or series of gates used for raising or lowering vessels as they pass from one water level to another.
EXS Existence Category (P,N,A) The state or condition of the feature.
LEN Length/Diameter (meters) (P,N,A) A measurement of the longer of two linear axes in meters. For a square feature, measure either axis. For a round feature, measure the diameter.
WID Width (meters) (P,N,A) A measurement of the shorter of two linear axes. For a square feature, measure either axis.

BI040 Sluice Gate (N,L) A gate used to regulate the flow of water.
LEN Length/Diameter (meters) (N,L) A measurement of the longer of two linear axes in meters. For a square feature, measure either axis. For a round feature, measure the diameter.

BI050 Water Intake Tower (P,A) A tower-like structure associated with a dam or water source and used for the intake of water.

WID Width (meters) (P,A) A measurement of the shorter of two linear axes. For a square feature, measure either axis. For a round feature, width shall be equal to LEN.

ZD020 Void Collection Area (A) An area lacking suitable source coverage, or where data is not required.
VCA Void Collection Attribute (A) Reason data is not collected.

ZD040 Named Location (T) A geographic place on earth, not normally appearing as a feature on a map, but having a name that is required to be placed on a map.

ZD045 Text Description (T) An area in which a characteristic or an activity pertaining to the area can be described and possibly is labeled on a product if deemed important at the time the product is being produced.

TABLE E-200. Surface Drainage Integer Value Description Table.

Thematic Layer: Surface Drainage
Coverage Name: sdr
Feature Table Description: Surface Drainage Integer Value Description Table
Table Name: int.vdt
DQ Layer Number: 8

{Header length}L;
Surface Drainage Integer Value Description Table;-;
id=I,1,P,Row Identifier,-,-,-,:
table=T,12,N,Name of the Feature Table,-,-,-,:
attribute=T,3,N,Column Name,-,-,-,:
value=S,1,N,Unique Value of Attribute,-,-,-,:
description=T,*,N,Description of Value,-,-,-,:;

1	damlockp.pft	exs	0	Unknown
2	damlockp.pft	exs	5	Under Construction
3	damlockp.pft	exs	28	Operational
4	damlockp.pft	hgt	0	Unknown
5	damlockp.pft	len	0	Unknown
6	damlockp.pft	mcc	0	Unknown
7	damlockp.pft	mcc	20	Composition
8	damlockp.pft	mcc	21	Concrete
9	damlockp.pft	mcc	30	Earthen
10	damlockp.pft	mcc	62	Masonry (Brick/Stone)
11	damlockp.pft	mcc	107	Steel
12	damlockp.pft	mcc	117	Wood
13	damlockp.pft	mcc	999	Other
14	damlockp.pft	wd5	0	Unknown
15	damlockp.pft	wid	0	Unknown
16	intakep.pft	wid	0	Unknown
17	springp.pft	hyc	0	Unknown
18	springp.pft	hyc	3	Dry
19	springp.pft	hyc	6	Non-Perennial/Intermittent/Fluctuating
20	springp.pft	hyc	8	Perennial/Permanent
21	springp.pft	scc	0	Unknown
22	springp.pft	scc	1	Alkaline
23	springp.pft	scc	4	Mineral
24	springp.pft	scc	9	Freshwater/Potable
25	springp.pft	ywq	0	Unknown
26	springp.pft	ywq	1	Potable
27	springp.pft	ywq	2	Treatable
28	springp.pft	ywq	3	Contaminated
29	damlockc.pft	exs	0	Unknown
30	damlockc.pft	exs	5	Under Construction
31	damlockc.pft	exs	28	Operational
32	damlockc.pft	hgt	0	Unknown
33	damlockc.pft	len	0	Unknown
34	damlockc.pft	mcc	0	Unknown
35	damlockc.pft	mcc	20	Composition

TABLE E-200. Surface Drainage Integer Value Description Table (Continued).

36	damlockc.pft	mcc	21	Concrete
37	damlockc.pft	mcc	30	Earthen
38	damlockc.pft	mcc	62	Masonry (Brick/Stone)
39	damlockc.pft	mcc	107	Steel
40	damlockc.pft	mcc	117	Wood
41	damlockc.pft	mcc	999	Other
42	damlockc.pft	wd5	0	Unknown
43	damlockc.pft	wid	0	Unknown
44	rapidsc.pft	hfc	0	Unknown
45	rapidsc.pft	hfc	2	Disappearing
46	rapidsc.pft	hfc	16	Dissipating
47	springc.pft	hyc	0	Unknown
48	springc.pft	hyc	3	Dry
49	springc.pft	hyc	6	Non-Perennial/Intermittent/Fluctuating
50	springc.pft	hyc	8	Perennial/Permanent
51	springc.pft	scc	0	Unknown
52	springc.pft	scc	1	Alkaline
53	springc.pft	scc	4	Mineral
54	springc.pft	scc	9	Freshwater/Potable
55	springc.pft	ywq	0	Unknown
56	springc.pft	ywq	1	Potable
57	springc.pft	ywq	2	Treatable
58	springc.pft	ywq	3	Contaminated
59	chanell.lft	atc	0	Unknown
60	chanell.lft	atc	2	Other
61	chanell.lft	atc	3	Underground Aqueduct
62	chanell.lft	bmc	0	Unknown
63	chanell.lft	bmc	1	Clay and Silt
64	chanell.lft	bmc	2	Silty Sands
65	chanell.lft	bmc	3	Sand and Gravel
66	chanell.lft	bmc	4	Gravel and Cobble
67	chanell.lft	bmc	5	Rocks and Boulders
68	chanell.lft	bmc	6	Bedrock
69	chanell.lft	bmc	7	Paved
70	chanell.lft	bmc	8	Peat
71	chanell.lft	bvl	0	Unknown
72	chanell.lft	bvl	2	Sparse (>5%<=15%)
73	chanell.lft	bvl	4	Dense (>50%)
74	chanell.lft	bvr	0	Unknown
75	chanell.lft	bvr	2	Sparse (>5%<=15%)
76	chanell.lft	bvr	4	Dense (>50%)
77	chanell.lft	cda	0	Unknown
78	chanell.lft	cda	1	Uncovered
79	chanell.lft	cda	2	Covered
80	chanell.lft	dw1	0	Unknown
81	chanell.lft	dw1	1	<= 0.8
82	chanell.lft	dw1	2	> 0.8 and <= 1.6
83	chanell.lft	dw1	3	> 1.6 and <= 2.4
84	chanell.lft	dw1	4	> 2.4
85	chanell.lft	gw1	0	Unknown
86	chanell.lft	gw1	1	<= 3

TABLE E-200. Surface Drainage Integer Value Description Table (Continued).

87	chanell.lft	gw1	2	> 3 and <= 18
88	chanell.lft	gw1	3	> 18 and <= 25
89	chanell.lft	gw1	4	> 25 and <= 50
90	chanell.lft	gwl	5	> 50 and <= 75
91	chanell.lft	gwl	6	> 75 and <= 100
92	chanell.lft	gwl	7	> 100 and <= 142
93	chanell.lft	gwl	8	> 142
94	chanell.lft	hfc	0	Unknown
95	chanell.lft	hfc	1	Channelized Stream
96	chanell.lft	hfc	8	Normal Channel
97	chanell.lft	hfc	14	Braided
98	chanell.lft	hfc	19	Gorge
99	chanell.lft	hfc	21	Wadi/Wash
100	chanell.lft	hl1	0	Unknown
101	chanell.lft	hl1	1	<= .5
102	chanell.lft	hl1	2	> .5 and <= 1.0
103	chanell.lft	hl1	3	> 1.0 and <= 5.0
104	chanell.lft	hl1	4	> 5.0
105	chanell.lft	hr1	0	Unknown
106	chanell.lft	hr1	1	<= .5
107	chanell.lft	hr1	2	> .5 and <= 1.0
108	chanell.lft	hr1	3	> 1.0 and <= 5.0
109	chanell.lft	hr1	4	> 5.0
110	chanell.lft	hyc	0	Unknown
111	chanell.lft	hyc	3	Dry
112	chanell.lft	hyc	6	Non-Perennial/Intermittent/Fluctuating
113	chanell.lft	hyc	8	Perennial/Permanent
114	chanell.lft	loc	0	Unknown
115	chanell.lft	loc	4	Below Surface/Submerged/Underground
116	chanell.lft	loc	8	On Ground Surface
117	chanell.lft	loc	25	Suspended/Elevated above Ground or Water Surface
118	chanell.lft	sl1	0	Unknown
129	chanell.lft	sl1	1	<= 30
120	chanell.lft	sl1	2	> 30 and <= 45
121	chanell.lft	sl1	3	> 45 and <= 60
122	chanell.lft	sl1	4	> 60
123	chanell.lft	sr1	0	Unknown
124	chanell.lft	sr1	1	<= 30
125	chanell.lft	sr1	2	> 30 and <= 45
126	chanell.lft	sr1	3	> 45 and <= 60
127	chanell.lft	sr1	4	> 60
128	chanell.lft	tid	0	Unknown
129	chanell.lft	tid	1	Non-Tidal
130	chanell.lft	tid	2	Tidal/Tidal Fluctuating
131	chanell.lft	wd3	0	Unknown
132	chanell.lft	wd3	20	<= 45 dm
133	chanell.lft	wd3	113	> 45 and <= 180 dm
134	chanell.lft	wv1	0	Unknown
135	chanell.lft	wv1	1	<= 1.5
136	chanell.lft	wv1	2	> 1.5

TABLE E-200. Surface Drainage Integer Value Description Table (Continued).

137	chanell.lft	ydh	0	Unknown
138	chanell.lft	ydh	1	<= 0.8
139	chanell.lft	ydh	2	> 0.8 and <= 1.6
140	chanell.lft	ydh	3	> 1.6 and <= 2.4
141	chanell.lft	ydh	4	> 2.4
142	chanell.lft	ydl	0	Unknown
143	chanell.lft	ydl	1	<= 0.8
144	chanell.lft	ydl	2	> 0.8 and <= 1.6
145	chanell.lft	ydl	3	> 1.6 and <= 2.4
146	chanell.lft	ydl	4	> 2.4
147	chanell.lft	ygw	0	Unknown
148	chanell.lft	ygw	1	<= 1.5
149	chanell.lft	ygw	2	> 1.5 and <= 3.0
150	chanell.lft	ygw	3	> 3.0 and <= 18.0
151	chanell.lft	ygw	4	> 18.0 and <= 25.0
152	chanell.lft	yhl	0	Unknown
153	chanell.lft	yhl	1	<= 0.2
154	chanell.lft	yhl	2	> 0.2 and <= 0.5
155	chanell.lft	yhl	3	> 0.5 and <= 1.0
156	chanell.lft	yhl	4	> 1.0 and <= 1.5
157	chanell.lft	yhl	5	> 1.5 and <= 2.0
158	chanell.lft	yhl	6	> 2.0 and <= 5.0
159	chanell.lft	yhl	7	> 5.0
160	chanell.lft	yhr	0	Unknown
161	chanell.lft	yhr	1	<= 0.2
162	chanell.lft	yhr	2	> 0.2 and <= 0.5
163	chanell.lft	yhr	3	> 0.5 and <= 1.0
164	chanell.lft	yhr	4	> 1.0 and <= 1.5
165	chanell.lft	yhr	5	> 1.5 and <= 2.0
166	chanell.lft	yhr	6	> 2.0 and <= 5.0
167	chanell.lft	yhr	7	> 5.0
168	chanell.lft	yvh	0	Unknown
169	chanell.lft	yvh	1	<= 0.5
170	chanell.lft	yvh	2	> 0.5 and <= 1.5
171	chanell.lft	yvh	3	> 1.5 and <= 2.5
172	chanell.lft	yvh	4	> 2.5
173	chanell.lft	yvl	0	Unknown
174	chanell.lft	yvl	1	<= 0.5
175	chanell.lft	yvl	2	> 0.5 and <= 1.5
176	chanell.lft	yvl	3	> 1.5 and <= 2.5
177	chanell.lft	yvl	4	> 2.5
178	daml.lft	exs	0	Unknown
179	daml.lft	exs	5	Under Construction
180	daml.lft	exs	28	Operational
181	daml.lft	hgt	0	Unknown
182	daml.lft	len	0	Unknown
183	daml.lft	mcc	0	Unknown
184	daml.lft	mcc	20	Composition
185	daml.lft	mcc	21	Concrete
186	daml.lft	mcc	30	Earthen
187	daml.lft	mcc	62	Masonry (Brick/Stone)

TABLE E-200. Surface Drainage Integer Value Description Table (Continued).

188	daml.lft	mcc	107	Steel
189	daml.lft	mcc	117	Wood
190	daml.lft	mcc	999	Other
191	daml.lft	wd5	0	Unknown
192	penstkl.lft	len	0	Unknown
193	penstkl.lft	loc	0	Unknown
194	penstkl.lft	loc	4	Below Surface/Submerged/Underground
195	penstkl.lft	loc	8	On Ground Surface
196	penstkl.lft	loc	25	Suspended/Elevated above Ground or Water Surface
197	chanela.aft	bmc	0	Unknown
198	chanela.aft	bmc	1	Clay and Silt
199	chanela.aft	bmc	2	Silty Sands
200	chanela.aft	bmc	3	Sand and Gravel
201	chanela.aft	bmc	4	Gravel and Cobble
202	chanela.aft	bmc	5	Rocks and Boulders
203	chanela.aft	bmc	6	Bedrock
204	chanela.aft	bmc	7	Paved
205	chanela.aft	bmc	8	Peat
206	chanela.aft	bvl	0	Unknown
207	chanela.aft	bvl	2	Sparse (>5%<=15%)
208	chanela.aft	bvl	4	Dense (>50%)
209	chanela.aft	bvr	0	Unknown
210	chanela.aft	bvr	2	Sparse (>5%<=15%)
211	chanela.aft	bvr	4	Dense (>50%)
212	chanela.aft	cda	0	Unknown
213	chanela.aft	cda	1	Uncovered
214	chanela.aft	cda	2	Covered
215	chanela.aft	dw1	0	Unknown
216	chanela.aft	dw1	1	<= 0.8
217	chanela.aft	dw1	2	> 0.8 and <= 1.6
218	chanela.aft	dw1	3	> 1.6 and <= 2.4
219	chanela.aft	dw1	4	> 2.4
220	chanela.aft	gw1	0	Unknown
221	chanela.aft	gw1	4	> 25 and <= 50
222	chanela.aft	gw1	5	> 50 and <= 75
223	chanela.aft	gw1	6	> 75 and <= 100
224	chanela.aft	gw1	7	> 100 and <= 142
225	chanela.aft	gw1	8	> 142
226	chanela.aft	hfc	0	Unknown
227	chanela.aft	hfc	1	Channelized Stream
228	chanela.aft	hfc	8	Normal Channel
229	chanela.aft	hfc	14	Braided
230	chanela.aft	hfc	19	Gorge
231	chanela.aft	hfc	21	Wadi/Wash
232	chanela.aft	hl1	0	Unknown
233	chanela.aft	hl1	1	<= .5
234	chanela.aft	hl1	2	> .5 and <= 1.0
235	chanela.aft	hl1	3	> 1.0 and <= 5.0
236	chanela.aft	hl1	4	> 5.0
237	chanela.aft	hr1	0	Unknown

TABLE E-200. Surface Drainage Integer Value Description Table (Continued).

238	chanela.aft	hr1	1	<= .5
239	chanela.aft	hr1	2	> .5 and <= 1.0
240	chanela.aft	hr1	3	> 1.0 and <= 5.0
241	chanela.aft	hr1	4	> 5.0
242	chanela.aft	hyc	0	Unknown
243	chanela.aft	hyc	3	Dry
244	chanela.aft	hyc	6	Non-Perennial/Intermittent/Fluctuating
245	chanela.aft	hyc	8	Perennial/Permanent
246	chanela.aft	sl1	0	Unknown
247	chanela.aft	sl1	1	<= 30
248	chanela.aft	sl1	2	> 30 and <= 45
249	chanela.aft	sl1	3	> 45 and <= 60
250	chanela.aft	sl1	4	> 60
251	chanela.aft	sr1	0	Unknown
252	chanela.aft	sr1	1	<= 30
253	chanela.aft	sr1	2	> 30 and <= 45
254	chanela.aft	sr1	3	> 45 and <= 60
255	chanela.aft	sr1	4	> 60
256	chanela.aft	tid	0	Unknown
257	chanela.aft	tid	1	Non-Tidal
258	chanela.aft	tid	2	Tidal/Tidal Fluctuating
259	chanela.aft	wd3	0	Unknown
260	chanela.aft	wd3	340	> 180 <= 500 dm
261	chanela.aft	wd3	750	> 500 <= 1000 dm
262	chanela.aft	wd3	1210	> 1000 <= 1420 dm
263	chanela.aft	wd3	1710	> 1420 dm
264	chanela.aft	wv1	0	Unknown
265	chanela.aft	wv1	1	<= 1.5
266	chanela.aft	wv1	2	> 1.5
267	chanela.aft	ydh	0	Unknown
268	chanela.aft	ydh	1	<= 0.8
269	chanela.aft	ydh	2	> 0.8 and <= 1.6
270	chanela.aft	ydh	3	> 1.6 and <= 2.4
271	chanela.aft	ydh	4	> 2.4
272	chanela.aft	ydl	0	Unknown
273	chanela.aft	ydl	1	<= 0.8
274	chanela.aft	ydl	2	> 0.8 and <= 1.6
275	chanela.aft	ydl	3	> 1.6 and <= 2.4
276	chanela.aft	ydl	4	> 2.4
277	chanela.aft	ygw	0	Unknown
278	chanela.aft	ygw	5	> 25.0 and <= 30.0
279	chanela.aft	ygw	6	> 30.0 and <= 35.0
280	chanela.aft	ygw	7	> 35.0 and <= 40.0
281	chanela.aft	ygw	8	> 40.0 and <= 45.0
282	chanela.aft	ygw	9	> 45.0 and <= 50.0
283	chanela.aft	ygw	10	> 50.0 and <= 75.0
284	chanela.aft	ygw	11	> 75.0 and <= 100.0
285	chanela.aft	ygw	12	> 100.0 and <= 142.0
286	chanela.aft	ygw	13	> 142.0
287	chanela.aft	yhl	0	Unknown
288	chanela.aft	yhl	1	<= 0.2

TABLE E-200. Surface Drainage Integer Value Description Table (Continued).

289	chanela.aft	yhl	2	> 0.2 and <= 0.5
290	chanela.aft	yhl	3	> 0.5 and <= 1.0
291	chanela.aft	yhl	4	> 1.0 and <= 1.5
292	chanela.aft	yhl	5	> 1.5 and <= 2.0
293	chanela.aft	yhl	6	> 2.0 and <= 5.0
294	chanela.aft	yhl	7	> 5.0
295	chanela.aft	yhr	0	Unknown
296	chanela.aft	yhr	1	<= 0.2
297	chanela.aft	yhr	2	> 0.2 and <= 0.5
298	chanela.aft	yhr	3	> 0.5 and <= 1.0
299	chanela.aft	yhr	4	> 1.0 and <= 1.5
300	chanela.aft	yhr	5	> 1.5 and <= 2.0
301	chanela.aft	yhr	6	> 2.0 and <= 5.0
302	chanela.aft	yhr	7	> 5.0
303	chanela.aft	yvh	0	Unknown
304	chanela.aft	yvh	1	<= 0.5
305	chanela.aft	yvh	2	> 0.5 and <= 1.5
306	chanela.aft	yvh	3	> 1.5 and <= 2.5
307	chanela.aft	yvh	4	> 2.5
308	chanela.aft	yvl	0	Unknown
309	chanela.aft	yvl	1	<= 0.5
310	chanela.aft	yvl	2	> 0.5 and <= 1.5
311	chanela.aft	yvl	3	> 1.5 and <= 2.5
312	chanela.aft	yvl	4	> 2.5
313	damlocka.aft	exs	0	Unknown
314	damlocka.aft	exs	5	Under Construction
315	damlocka.aft	exs	28	Operational
316	damlocka.aft	hgt	0	Unknown
317	damlocka.aft	len	0	Unknown
318	damlocka.aft	mcc	0	Unknown
319	damlocka.aft	mcc	20	Composition
320	damlocka.aft	mcc	21	Concrete
321	damlocka.aft	mcc	30	Earthen
322	damlocka.aft	mcc	62	Masonry (Brick/Stone)
323	damlocka.aft	mcc	107	Steel
324	damlocka.aft	mcc	117	Wood
325	damlocka.aft	mcc	999	Other
326	damlocka.aft	wd5	0	Unknown
327	damlocka.aft	wid	0	Unknown
328	lakeresa.aft	hyc	0	Unknown
329	lakeresa.aft	hyc	6	Non-Perennial/Intermittent/Fluctuating
330	lakeresa.aft	hyc	8	Perennial/Permanent
331	sdrvoida.aft	vca	0	Unknown
332	sdrvoida.aft	vca	2	Area Too Rough to Collect
333	sdrvoida.aft	vca	3	No Available Imagery
334	sdrvoida.aft	vca	6	No Available Map Source
335	sdrvoida.aft	vca	7	No Suitable Imagery

E.3.11 Slope/Surface Configuration Coverage. This coverage will have complete (contiguous) area coverage.

TABLE E-201. Content and format for surface configuration coverage feature class schema table.

Thematic Layer: Slope/Surface Configuration
Coverage Name: slp
Feature Table Description: Slope/Surface Configuration Feature Class Schema Table
Table Name: fcs
DQ Layer Number: 9

{Header length}L;					
Slope/Surface Configuration Feature Class Schema Table;-;					
id=I,1,P,Row Identifier,-,-,-,:					
feature_class=T,8,N,Name of Feature Class,-,-,-,:					
table1=T,12,N,First Table,-,-,-,:					
table1_key=T,16,N,Column Name in First Table,-,-,-,:					
table2=T,12,N,Second Table,-,-,-,:					
table2_key=T,16,N,Column Name in Second Table,-,-,-,:;					
1	pchanela	pchanela.aft	id	pchanela.ajt	pchanela.aft_id
2	pchanela	pchanela.ajt	fac_id	fac	id
3	pchanela	fac	id	pchanela.ajt	fac_id
4	pchanela	pchanela.ajt	pchanela.aft_id	pchanela.aft	id
5	pwatera	pwatera.aft	id	pwatera.ajt	pwatera.aft_id
6	pwatera	pwatera.ajt	fac_id	fac	id
7	pwatera	fac	id	pwatera.ajt	fac_id
8	pwatera	pwatera.ajt	pwatera.aft_id	pwatera.aft	id
9	slpolya	slpolya.aft	id	slpolya.ajt	slpolya.aft_id
10	slpolya	slpolya.ajt	fac_id	fac	id
11	slpolya	fac	id	slpolya.ajt	fac_id
12	slpolya	slpolya.ajt	slpolya.aft_id	slpolya.aft	id
13	slpvoida	slpvoida.aft	id	slpvoida.ajt	slpvoida.aft_id
14	slpvoida	slpvoida.ajt	fac_id	fac	id
15	slpvoida	fac	id	slpvoida.ajt	fac_id
16	slpvoida	slpvoida.ajt	slpvoida.aft_id	slpvoida.aft	id

TABLE E-202. Channel Area Join Table.

(This table is used to combine area slope features with their associated face primitives in a one-to-many relationship.)

```
{Header length}L;
Channel Area Join Table;-;
id=I,1,P,Row Identifier,-,-,-,:
pchanela.aft_id=I,1,N,Feature Key,-,pchanela.jti,-,:
tile_id=S,1,N,Tile Reference ID,-,tile1_id.jti,-,:
fac_id=I,1,N,Face Primitive ID,-,fac1_id.jti,-,:;
```

TABLE E-203. Channel Area Feature Table.

Thematic Layer: Slope/Surface Configuration
Coverage Name: slp
Feature Table Description: Channel Area Feature Table
Table Name: pchanela.aft
DQ Layer Number: 9
Portrayal Criteria: For BH020 and BH140 must be perennial and water width >= 25 meters as well as BH030.

```
{Header length}L;
Channel Area Feature Table;-;
id=I,1,P,Row Identifier,-,-,-,:
f_code=T,5,N,FACC Feature Code,char.vdt,f_code1.ati,-,:;
```

Column	Description	Value	Value Meaning	Applicable f_code for Each Attribute Value
id	Row Identifier	Sequential beginning with 1		
f_code	FACC Feature Code			
		BH020	Canal	
		BH030	Ditch	
		BH140	River/Stream	

TABLE E-204. Water Area Join Table.

(This table is used to combine area slope features with their associated face primitives in a one-to-many relationship.)

```
{Header length}L;
Water Area Join Table;-;
id=I,1,P,Row Identifier,-,-,-,:
pwatera.aft_id=I,1,N,Feature Key,-,pwatera.jti,-,:
tile_id=S,1,N,Tile Reference ID,-,tile2_id.jti,-,:
fac_id=I,1,N,Face Primitive ID,-,fac2_id.jti,-,:;
```

TABLE E-205. Water Area Feature Table.

Thematic Layer: Slope/Surface Configuration
Coverage Name: slp
Feature Table Description: Water Area Feature Table
Table Name: pwatera.aft
DQ Layer Number: 9
Portrayal Criteria: For AC030, BA040, and BH155 area >= 15,625 square meters, for BH040 and BH050 area >= 5,625 square meters, and for BH080 and BH130 are perennial, and area >= 2,500 square meters.

```
{Header length}L;
Water Area Feature Table;-;
id=I,1,P,Row Identifier,-,-,-,:
f_code=T,5,N,FACC Feature Code,char.vdt,f_code2.ati,-,:;
```

Column	Description	Value	Value Meaning	Applicable f_code for Each Attribute Value
id	Row Identifier	Sequential beginning with 1		
f_code	FACC Feature Code			
		AC030	Settling Basin/Sludge Pond	
		BA040	Water (Except Inland)	
		BH040	Filtration Beds/Aeration Beds	
		BH050	Fish Hatchery/Fish Farm/Marine Farm	
		BH080	Lake/Pond	
		BH130	Reservoir	
		BH155	Salt Evaporator	

TABLE E-206. Slope Area Join Table.

(This table is used to combine area slope features with their associated face primitives in a one-to-many relationship.)

```
{Header length}L;
Slope Area Join Table;-;
id=I,1,P,Row Identifier,-,-,-,:
slpolya.aft_id=I,1,N,Feature Key,-,slpolya.jti,-,:
tile_id=S,1,N,Tile Reference ID,-,tile3_id.jti,-,:
fac_id=I,1,N,Face Primitive ID,-,fac3_id.jti,-,:;
```

TABLE E-207. Slope Area Feature Table.

Thematic Layer: Slope/Surface Configuration
Coverage Name: slp
Feature Table Description: Slope Area Feature Table
Table Name: slpolya.aft
DQ Layer Number: 9
Portrayal Criteria: For SA050 area >= 50,000 square meters and width >= 50 meters. Slope polygons which are adjacent to channel area features or water area features may have area < 50,000 square meters.

```
{Header length}L;
Slope Area Feature Table;-;
id=I,1,P,Row Identifier,-,-,-,:
f_code=T,5,N,FACC Feature Code,char.vdt,-,-,:
gsc=S,1,N,Ground Slope Category,int.vdt,-,-,:
spr=S,1,N,Slope Polygon Range,int.vdt,-,-,:;
```

Column	Description	Value	Value Meaning	Applicable f_code for Each Attribute Value
id	Row Identifier	Sequential beginning with 1		
f_code	FACC Feature Code			
		SA050	Slope Polygon	
gsc	Ground Slope Category (used only when VITD derived)			
		0	Unknown (default no VITD)	SA050
		1	0 to > 45% Culturally or naturally dissected land	SA050
		2	<= 3%	SA050
		3	> 3 and <= 10%	SA050
		4	> 10 and <= 20%	SA050
		5	> 20 and <= 30%	SA050
		6	> 30 and <= 45%	SA050
		7	> 45%	SA050

TABLE E-207. Slope Area Feature Table (Continued).

spr	Slope Polygon Range	[percent]	
	0	<= 3	SA050
	1	> 3 and <= 10	SA050
	2	> 10 and <= 15	SA050
	3	> 15 and <= 20	SA050
	4	> 20 and <= 30	SA050
	5	> 30 and <= 45	SA050
	6	> 45 and <= 60	SA050
	7	> 60 and <= 85	SA050
	8	> 85	SA050
	999	Unknown (default if using VITD)	SA050

TABLE E-208. Slope Void Collection Area Join Table.
(This table is used to combine slope area features with their associated face primitives in a one-to-many relationship.)

```
{Header length}L;
Slope Void Collection Area Join Table;-;
id=I,1,P,Row Identifier,-,-,-,:
slpvoida.aft_id=I,1,N,Feature Key,-,slpvoida.jti,-,:
tile_id=S,1,N,Tile Reference ID,-,tile4_id.jti,-,:
fac_id=I,1,N,Face Primitive ID,-,fac4_id.jti,-,:;
```

TABLE E-209. Slope/Surface Configuration Void Collection Area Feature Table.

Thematic Layer:	Slope/Surface Configuration
Coverage Name:	slp
Feature Table Description:	Slope Void Collection Area Feature Table
Table Name:	slpvoida.aft
DQ Layer Number:	9
Portrayal Criteria:	For ZD020 area >=15,625 square meters.

```
{Header length}L;
Slope Void Collection Area Feature Table;-;
id=I,1,P,Row Identifier,-,-,-,:
f_code=T,5,N,FACC Feature Code,char.vdt,-,-,:
vca=S,1,N,Void Collection Attribute,int.vdt,-,-,:;
```

Column	Description	Value	Value Meaning	Applicable f_code for Each Attribute Value
id	Row Identifier	Sequential beginning with 1		
f_code	FACC Feature Code			
		ZD020	Void Collection Area	
vca	Void Collection Attribute			
		0	Unknown	ZD020
		2	Area Too Rough to Collect	ZD020
		3	No Available Imagery	ZD020
		6	No Available Map Source	ZD020
		7	No Suitable Imagery	ZD020

TABLE E-210. Slope/Surface Configuration Feature Class Attribute Table.

Thematic Layer: Slope/Surface Configuration
Coverage Name: slp
Table Description: Slope/Surface Configuration Feature Class Attribute Table
Table Name: fca
DQ Layer Number: 9

```
{Header length}L;
Slope/Surface Configuration Feature Class Attribute Table;-;
id=I,1,P,Row Identifier,-,-,-,:
fclass=T,8,U,Feature Class Name,-,-,-,:
type=T,1,N,Feature Type,char.vdt,-,-,:
descr=T,*,N,Description,-,-,-,:;
```

Column	Description	Value	Value Meaning	Applicable Feature Class for Each Attribute Value
id	Row Identifier	Sequential beginning with 1		
fclass	Feature Class Name			
		pchanela		
		pwatera		
		slpolya		
		slpvoida		
type	Feature Type			
		A	Area Feature	pchanela, pwatera, slpolya,slpvoida
descr	Description			
		Channel Area Features		pchanela
		Water Area Features		pwatera
		Slope Area Features		slpolya
		Slope Void Collection Area Features		slpvoida

TABLE E-211. Slope/Surface Configuration Character Value Description Table.

Thematic Layer: Slope/Surface Configuration
Coverage Name: slp
Feature Table Description: Slope/Surface Configuration Character Value Description Table
Table Name: char.vdt
DQ Layer Number: 9

{Header length}L;
Slope/Surface Configuration Character Value Description Table;-;
id=I,1,P,Row Identifier,-,-,-,:
table=T,12,N,Name of the Feature Table,-,-,-,:
attribute=T,6,N,Column Name,-,-,-,:
value=T,5,N,Unique Value of Attribute,-,-,-,:
description=T,*,N,Description of Value,-,-,-,:;

1	pchanela.aft	f_code	BH020	Canal
2	pchanela.aft	f_code	BH030	Ditch
3	pchanela.aft	f_code	BH140	River/Stream
4	pwatera.aft	f_code	AC030	Settling Basin/Sludge Pond
5	pwatera.aft	f_code	BA040	Water (Except Inland)
6	pwatera.aft	f_code	BH040	Filtration Beds/Aeration Beds
7	pwatera.aft	f_code	BH050	Fish Hatchery/Fish Farm/Marine Farm
8	pwatera.aft	f_code	BH080	Lake/Pond
9	pwatera.aft	f_code	BH130	Reservoir
10	pwatera.aft	f_code	BH155	Salt Evaporator
11	slpolya.aft	f_code	SA050	Slope Polygon
12	slpvoida.aft	f_code	ZD020	Void Collection Area
13	fca	type	A	Area Feature

E.3.11.1 Slope/Surface Configuration glossary.

AC030 Settling Basin/Sludge Pond (A) A site where solid matter is precipitated from a liquid by evaporating or settling.

BA040 Water (Except Inland) (A) An area of water which normally has tidal fluctuations.

BH020 Canal (A) A manmade or improved natural waterway used for transportation.

BH030 Ditch (A) A channel constructed for the purpose of irrigation or drainage.

BH040 Filtration Beds/Aeration Beds (A) An area containing layers of material used to filter or aerate water.

BH050 Fish Hatchery/Fish Farm/Marine Farm (A) An enclosure of water for the breeding and/or rearing of fish.

BH080 Lake/Pond (A) A body of water surrounded by land. (See also BH130)

BH130 Reservoir (A) A man-made open enclosure or area formed for the storage of water. (See also BH080)

BH140 River/Stream (A) A natural flowing watercourse.

BH155 Salt Evaporator (A) Shallow pools, normally man made, used for natural evaporation of water for the collection of salt.

SA050 Slope Polygon (A) An area enclosing a group of slope values falling within a set range.
GSC Ground Slope Category (A) Range indicating the slope of ground within delineated area of feature usually manually derived, reported in percent.
SPR Slope Polygon Range (A) Range indicating the slope of ground within delineated area of feature, reported in percent.

ZD020 Void Collection Area (A) An area lacking suitable source coverage, or where data is not required.
VCA Void Collection Attribute (A) Reason data is not collected.

TABLE E-212. Slope/Surface Configuration Integer Value Description Table.

Thematic Layer: Slope/Surface Configuration
Coverage Name: slp
Feature Table Description: Slope/Surface Configuration Integer Value Description Table
Table Name: int.vdt
DQ Layer Number: 9

{Header length}L;
Slope/Surface Configuration Integer Value Description Table;-;
id=I,1,P,Row Identifier,-,-,-,:
table=T,12,N,Name of the Feature Table,-,-,-,:
attribute=T,3,N,Column Name,-,-,-,:
value=S,1,N,Unique Value of Attribute,-,-,-,:
description=T,*,N,Description of Value,-,-,-,:;

1	slpolya.aft	gsc	0	Unknown
2	slpolya.aft	gsc	1	0 to >45% Culturally or naturally dissected land
3	slpolya.aft	gsc	2	<=3%
4	slpolya.aft	gsc	3	>3 and <=10%
5	slpolya.aft	gsc	4	>10 and <=20%
6	slpolya.aft	gsc	5	>20 and <=30%
7	slpolya.aft	gsc	6	>30 and <=45%
8	slpolya.aft	gsc	7	>45%
9	slpolya.aft	spr	0	<= 3
10	slpolya.aft	spr	1	> 3 and <= 10
11	slpolya.aft	spr	2	> 10 and <= 15
12	slpolya.aft	spr	3	> 15 and <= 20
13	slpolya.aft	spr	4	> 20 and <= 30
14	slpolya.aft	spr	5	> 30 and <= 45
15	slpolya.aft	spr	6	> 45 and <= 60
16	slpolya.aft	spr	7	> 60 and <= 85
17	slpolya.aft	spr	8	> 85
18	slpolya.aft	spr	999	Unknown
19	slpvoida.aft	vca	0	Unknown
20	slpvoida.aft	vca	2	Area Too Rough to Collect
21	slpvoida.aft	vca	3	No Available Imagery
22	slpvoida.aft	vca	6	No Available Map Source
23	slpvoida.aft	vca	7	No Suitable Imagery

E.3.12 Soil/Surface Materials Coverage. This coverage will have complete (contiguous) area coverage.

TABLE E-213. Content and format for Soil/Surface Materials coverage feature class schema table.

Thematic Layer: Soil/Surface Materials
Coverage Name: smc
Feature Table Description: Soil/Surface Materials Feature Class Schema Table
Table Name: fcs
DQ Layer Number: 10

```
{Header length}L;
Soil/Surface Materials Feature Class Schema Table;-;
id=I,1,P,Row Identifier,-,-,-,:
feature_class=T,8,N,Name of Feature Class,-,-,-,:
table1=T,12,N,First Table,-,-,-,:
table1_key=T,16,N,Column Name in First Table,-,-,-,:
table2=T,12,N,Second Table,-,-,-,:
table2_key=T,16,N,Column Name in Second Table,-,-,-,:;
```

1	sbuiltua	sbuiltua.aft	id	sbuiltua.ajt	sbuiltua.aft_id
2	sbuiltua	sbuiltua.ajt	fac_id	fac	id
3	sbuiltua	fac	id	sbuiltua.ajt	fac_id
4	sbuiltua	sbuiltua.ajt	sbuiltua.aft_id	sbuiltua.aft	id
5	schanela	schanela.aft	id	schanela.ajt	schanela.aft_id
6	schanela	schanela.ajt	fac_id	fac	id
7	schanela	fac	id	schanela.ajt	fac_id
8	schanela	schanela.ajt	schanela.aft_id	schanela.aft	id
9	swatera	swatera.aft	id	swatera.ajt	swatera.aft_id
10	swatera	swatera.ajt	fac_id	fac	id
11	swatera	fac	id	swatera.ajt	fac_id
12	swatera	swatera.ajt	swatera.aft_id	swatera.aft	id
13	soila	soila.aft	id	soila.ajt	soila.aft_id
14	soila	soila.ajt	fac_id	fac	id
15	soila	fac	id	soila.ajt	fac_id
16	soila	soila.ajt	soila.aft_id	soila.aft	id
17	smvoida	smvoida.aft	id	smvoida.ajt	smvoida.aft_id
18	smvoida	smvoida.ajt	fac_id	fac	id
19	smvoida	fac	id	smvoida.ajt	fac_id
20	smvoida	smvoida.ajt	smvoida.aft_id	smvoida.aft	id

TABLE E-214. Built-Up Area Join Table.

(This table is used to combine area surface materials features with their associated face primitives in a one-to-many relationship.)

```
{Header length}L;
Built-Up Area Join Table;-;
id=I,1,P,Row Identifier,-,-,-,:
sbuiltua.aft_id=I,1,N,Feature Key,-,sbuiltua.jti,-,:
tile_id=S,1,N,Tile Reference ID,-,tile1_id.jti,-,:
fac_id=I,1,N,Face Primitive ID,-,fac1_id.jti,-,:;
```

TABLE E-215. Built-Up Area Feature Table.

Thematic Layer: Soil/Surface Materials
Coverage Name: smc
Feature Table Description: Built-Up Area Feature Table
Table Name: sbuiltua.aft
DQ Layer Number: 10
Portrayal Criteria: For AL020, AL105, and AL135 area >= 15,625 square meters.

```
{Header length}L;
Built-Up Area Feature Table;-;
id=I,1,P,Row Identifier,-,-,-,:
f_code=T,5,N,FACC Feature Code,char.vdt,f_code1.ati,-,:
ppt=S,1,N,Populated Place Type,int.vdt,-,-,:;
```

Column	Description	Value	Value Meaning	Applicable f_code for Each Attribute Value
id	Row Identifier	Sequential beginning with 1		
f_code	FACC Feature Code			
		AL020	Built-Up Area	
		AL105	Settlement	
		AL135	Native Settlement	
ppt	Populated Place Type			
		-32768	Null	AL020,AL135
		0	Unknown	AL105
		2	Shantytown	AL105

TABLE E-216. Channel Area Join Table.

(This table is used to combine area surface materials features with their associated face primitives in a one-to-many relationship.)

```
{Header length}L;
Channel Area Join Table;-;
id=I,1,P,Row Identifier,-,-,-,:
schanela.aft_id=I,1,N,Feature Key,-,schanela.jti,-,:
tile_id=S,1,N,Tile Reference ID,-,tile2_id.jti,-,:
fac_id=I,1,N,Face Primitive ID,-,fac2_id.jti,-,:;
```

TABLE E-217. Channel Area Feature Table.

Thematic Layer: Soil/Surface Materials
Coverage Name: smc
Feature Table Description: Channel Area Feature Table
Table Name: schanela.aft
DQ Layer Number: 10
Portrayal Criteria: For BH020 and BH140 must be perennial and water width >= 25 meters as well as BH030.

```
{Header length}L;
Channel Area Feature Table;-;
id=I,1,P,Row Identifier,-,-,-,:
f_code=T,5,N,FACC Feature Code,char.vdt,f_code2.ati,-,;
```

Column	Description	Value	Value Meaning	Applicable f_code for Each Attribute Value
id	Row Identifier	Sequential beginning with 1		
f_code	FACC Feature Code			
		BH020	Canal	
		BH030	Ditch	
		BH140	River/Stream	

TABLE E-218. Water Area Join Table.

(This table is used to combine area surface materials features with their associated face primitives in a one-to-many relationship.)

```
{Header length}L;
Water Area Join Table;-;
id=I,1,P,Row Identifier,-,-,-,:
swatera.aft_id=I,1,N,Feature Key,-,swatera.jti,-,:
tile_id=S,1,N,Tile Reference ID,-,tile3_id.jti,-,:
fac_id=I,1,N,Face Primitive ID,-,fac3_id.jti,-,:;
```

TABLE E-219. Water Area Feature Table.

Thematic Layer: Soil/Surface Materials
Coverage Name: smc
Feature Table Description: Water Area Feature Table
Table Name: swatera.aft
DQ Layer Number: 10
Portrayal Criteria: For AC030, BA040, and BH155 area >= 15,625 square meters, for BH040 and BH050 area >= 5,625 square meters, and for BH080 and BH130 are perennial, and area >= 2,500 square meters.

```
{Header length}L;
Water Area Feature Table;-;
id=I,1,P,Row Identifier,-,-,-,:
f_code=T,5,N,FACC Feature Code,char.vdt,f_code3.ati,-,:;
```

Column	**Description**	**Value**	**Value Meaning**	**Applicable f_code for Each Attribute Value**
id	Row Identifier	Sequential beginning with 1		
f_code	FACC Feature Code			
		AC030	Settling Basin/Sludge Pond	
		BA040	Water (Except Inland)	
		BH040	Filtration Beds/Aeration Beds	
		BH050	Fish Hatchery/Fish Farm/Marine Farm	
		BH080	Lake/Pond	
		BH130	Reservoir	
		BH155	Salt Evaporator	

TABLE E-220. Soil Area Join Table.

(This table is used to combine area surface materials features with their associated face primitives in a one-to-many relationship.)

```
{Header length}L;
Soil Area Join Table;-;
id=I,1,P,Row Identifier,-,-,-,:
soila.aft_id=I,1,N,Feature Key,-,soila.jti,-,:
tile_id=S,1,N,Tile Reference ID,-,tile4_id.jti,-,:
fac_id=I,1,N,Face Primitive ID,-,fac4_id.jti,-,:;
```

TABLE E-221. Soil Area Feature Table.

Thematic Layer: Soil/Surface Materials
Coverage Name: smc
Feature Table Description: Soil Area Feature Table
Table Name: soila.aft
DQ Layer Number: 10
Portrayal Criteria: For BJ100 and DA010 area >= 50,000 square meters.

```
{Header length}L;
Soil Area Feature Table;-;
id=I,1,P,Row Identifier,-,-,-,:
f_code=T,5,N,FACC Feature Code,char.vdt,f_code4.ati,-,:
sm1=S,1,N,Surficial Material Depth Category,int.vdt,-,-,:
smc=S,1,N,Surface Material Category,int.vdt,-,-,:
srd=S,1,N,Surface Roughness Description,int.vdt,-,-,:
stg=S,1,N,Soil Trafficability Group,int.vdt,-,-,:
stp=S,1,N,Soil Types,int.vdt,-,-,:
swc=S,1,N,Soil Wetness Condition,int.vdt,-,-,:
ysd=S,1,N,Soil Depth with Greater Precision,int.vdt,-,-,:
ywt=S,1,N,Depth to Water Table,int.vdt,-,-,:;
```

Column	Description	Value	Value Meaning	Applicable f_code for Each Attribute Value
id	Row Identifier	Sequential beginning with 1		
f_code	FACC Feature Code			
		BJ100	Snow Field/Ice Field	
		DA010	Ground Surface Element	
sm1	Surficial Material Depth Category			
		0	Unknown	DA010,BJ100
		1	< 0.5 (Meters)	DA010,BJ100
		2	>= 0.5 (Meters)	DA010,BJ100
smc	Surface Material Category			
		-32768	Null	BJ100
		0	Unknown	DA010
		84	Rock/Rocky	DA010
		104	Soil	DA010

TABLE E-221. Soil Area Feature Table (Continued).

srd	Surface Roughness Description			
		0	Unknown	DA010,BJ100
		1	No surface roughness effect	DA010,BJ100
		2	Area of high landslide potential	DA010,BJ100
	Natural irregularities above surface			
		11	Surface of numerous cobbles and boulders	DA010,BJ100
		12	Areas of stony terrain	DA010,BJ100
		13	Stony soil with surface rock	DA010,BJ100
		14	Stony soil with scattered boulders	DA010,BJ100
		15	Stony soil with numerous boulders	DA010,BJ100
		16	Numerous boulders	DA010,BJ100
		17	Numerous rock outcrops	DA010,BJ100
		18	Area of scattered boulders	DA010,BJ100
		19	Talus slope	DA010,BJ100
		20	Boulder field	DA010,BJ100
	Bedrock/exposed surface material			
		31	Highly fractured rock surface	DA010,BJ100
		32	Weathered lava flows	DA010,BJ100
		33	Unweathered lava flows	DA010,BJ100
		34	Stony soil with numerous rock outcrops	DA010,BJ100
		35	Irregular surface with deep fractures of foliation	DA010,BJ100
		36	Rugged terrain with numerous rock outcrops	DA010,BJ100
		37	Rugged bedrock surface	DA010,BJ100
		38	Sand dunes	DA010,BJ100
		39	Sand dunes/low	DA010,BJ100
		40	Sand dunes/high	DA010,BJ100
		41	Active sand dunes	DA010,BJ100
		42	Stabilized sand dunes	DA010,BJ100
		43	Highly distorted area, sharp rocky ridges	DA010,BJ100
	Fluvial, glacial influences			
		51	Stony soil cut by numerous gullies	DA010,BJ100
		52	Moderately dissected terrain	DA010,BJ100
		53	Moderately dissected terrain with scattered rock outcrops	DA010,BJ100
		54	Dissected floodplain	DA010,BJ100
		55	Highly dissected terrain	DA010,BJ100
		56	Area with deep erosional gullies	DA010,BJ100
		57	Steep, rugged, dissected terrain with narrow gullies	DA010,BJ100

TABLE E-221. Soil Area Feature Table (Continued).

	58	Karst/areas of numerous sink-holes and solution valleys	DA010,BJ100
	59	Karst/area of numerous sinkholes	DA010,BJ100
	60	Karst/hummocky terrain covered with large conical hills	DA010,BJ100
	61	Karst/hummocky terrain covered with low, broad-based mounds	DA010,BJ100
	62	Arroyo/wadi/wash	DA010,BJ100
	63	Playa/dry lake	DA010,BJ100
	64	Area of numerous meander scars and/or oxbow lakes	DA010,BJ100
	65	Solifluction lobes and frost scars	DA010,BJ100
	66	Hummocky ground, areas of frost heaving	DA010,BJ100
	67	Area of frost polygons	DA010,BJ100
	68	Area containing sabkhas	DA010,BJ100
	69	Area of numerous small lakes and ponds	DA010,BJ100
	70	Area of numerous crevasses	DA010,BJ100
Cultural, man-made influences			
	81	Area of numerous terraces	DA010,BJ100
	82	Quarries	DA010,BJ100
	83	Strip mines	DA010,BJ100
	84	Quarry/gravel pit	DA010,BJ100
	85	Quarry/sand pit	DA010,BJ100
	86	Mine tailings/waste piles	DA010,BJ100
	87	Salt evaporators	DA010,BJ100
	88	Area of numerous dikes	DA010,BJ100
	89	Area of numerous diked fields	DA010,BJ100
	90	Area of numerous fences	DA010,BJ100
	91	Area of numerous stone walls	DA010,BJ100
	92	Area of numerous man-made canals/drains/ditches	DA010,BJ100
	93	Area of numerous terraced fields	DA010,BJ100
	94	Parallel earthen mounds (row crops)	DA010,BJ100
	95	Area of numerous hedgerows	DA010,BJ100

TABLE E-221. Soil Area Feature Table (Continued).

stg Soil Trafficability Group

-32768	Null		BJ100
0	Unknown		DA010
1	A	[GW,GP,SW,SP]	DA010
2	B	[CH]	DA010
3	C	[GC,SC,CL]	DA010
4	D	[GM,SM,ML,ML-CL,MH,OL,OH]	DA010
5	E	[PT]	DA010
6	X	[not Evaluated]	DA010

stp Soil Types

-32768	Null	BJ100
0	Unknown	DA010
1	GW Well graded gravels or gravel-sand mixtures	DA010
2	GP Poorly graded gravels or gravel-sand mixtures	DA010
3	GM Silty gravels, gravel-sand-silt mixtures	DA010
4	GC Clayey gravels, gravel-sand-clay mixture	DA010
5	SW Well graded sand or gravelly sands	DA010
6	SP Poorly graded sands or gravelly sands	DA010
7	SM Silty sands, sand-silt mixture	DA010
8	SC Clayey sands, sand-clay mixtures	DA010
9	ML Inorganic silts and very fine sands	DA010
10	CL Inorganic clays of low to medium plasticity	DA010
11	OL Organic silts and organic silty clays	DA010
12	CH Inorganic clays of high plasticity, fat clays	DA010
13	MH Inorganic silts, micaceous or diatomaceous	DA010
14	OH Organic clays of medium to high plasticity	DA010
15	PT Peat and other highly organic soils	DA010
17	ML-CL Soil type having both ML and CL charcteristics	DA010
18	Evaporites	DA010
999	Other	DA010

TABLE E-221. Soil Area Feature Table (Continued).

swc	Soil Wetness Condition			
		0	Unknown	DA010,BJ100
		1	Dry	DA010
		2	Moist	DA010
		3	Wet	DA010
		4	Frozen/Permafrost	DA010,BJ100
ysd	Soil Depth with Greater Precision (value added)			
		-32768	Null	BJ100
		0	Unknown (default)	DA010
		1	< 0.25	DA010
		2	>= 0.25 and < 0.5	DA010
		3	>= 0.5 and< 1.5	DA010
		4	>= 1.5 and < 2.5	DA010
		5	>= 2.5 and < 5.0	DA010
		6	>= 5.0 and < 10.0	DA010
		7	>= 10.0	DA010
ywt	Depth to Water Table (value added)			
		-32768	Null	BJ100
		0	Unknown (default)	DA010
		1	> 0 and <= 0.3	DA010
		2	> 0.3 and <= 1.2	DA010
		3	> 1.2	DA010
		4	At Ground Surface	DA010

TABLE E-222. Soil Void Collection Area Join Table.
(This table is used to combine area surface materials features with their associated face primitives in a one-to-many relationship.)

```
{Header length}L;
Soil Void Collection Area Join Table;-;
id=I,1,P,Row Identifier,-,-,-,:
smvoida.aft_id=I,1,N,Feature Key,-,smvoida.jti,-,:
tile_id=S,1,N,Tile Reference ID,-,tile5_id.jti,-,:
fac_id=I,1,N,Face Primitive ID,-,fac5_id.jti,-,:;
```

TABLE E-223. Soil Void Collection Area Feature Table.

Thematic Layer:	Soil/Surface Materials
Coverage Name:	smc
Feature Table Description:	Soil Void Collection Area Feature Table
Table Name:	smvoida.aft
DQ Layer Number:	10
Portrayal Criteria:	For ZD020 area >=15,625 square meters.

```
{Header length}L;
Soil Void Collection Area Feature Table;-;
id=I,1,P,Row Identifier,-,-,-,:
f_code=T,5,N,FACC Feature Code,char.vdt,-,-,:
vca=S,1,N,Void Collection Attribute,int.vdt,-,-,:;
```

Column	Description	Value	Value Meaning	Applicable f_code for Each Attribute Value
id	Row Identifier	Sequential beginning with 1		
f_code	FACC Feature Code			
		ZD020	Void Collection Area	
vca	Void Collection Attribute			
		0	Unknown	ZD020
		2	Area Too Rough to Collect	ZD020
		3	No Available Imagery	ZD020
		6	No Available Map Source	ZD020
		7	No Suitable Imagery	ZD020

TABLE E-224. Soil/Surface Materials Feature Class Attribute Table.

Thematic Layer: Soil/Surface Materials
Coverage Name: smc
Table Description: Soil/Surface Materials Feature Class Attribute Table
Table Name: fca
DQ Layer Number: 10

```
{Header length}L;
Soil/Surface Materials Feature Class Attribute Table;-;
id=I,1,P,Row Identifier,-,-,-,:
fclass=T,8,U,Feature Class Name,-,-,-,:
type=T,1,N,Feature Type,char.vdt,-,-,:
descr=T,*,N,Description,-,-,-,:;
```

Column	Description	Value	Value Meaning	Applicable Feature Class for Each Attribute Value
id	Row Identifier	Sequential beginning with 1		
fclass	Feature Class Name			
		sbuiltua		
		schanela		
		swatera		
		soila		
		smvoida		
type	Feature Type			
		A	Area Feature	sbuiltua,schanela, soila,swatera, smvoida
descr	Description			
		Built-Up Area Features		sbuiltua
		Channel Area Features		schanela
		Water Area Features		swatera
		Soil Area Features		soila
		Soil Void Collection Area Features		smvoida

TABLE E-225. Soil/Surface Materials Character Value Description Table.

Thematic Layer: Soil/Surface Materials
Coverage Name: smc
Table Description: Soil/Surface Materials Character Value Description Table
Table Name: char.vdt
DQ Layer Number: 10

{Header length}L;
Soil/Surface Materials Character Value Description Table;-;
id=I,1,P,Row Identifier,-,-,-,:
table=T,12,N,Name of the Feature Table,-,-,-,:
attribute=T,6,N,Column Name,-,-,-,:
value=T,5,N,Unique Value of Attribute,-,-,-,:
description=T,*,N,Description of Value,-,-,-,:;

1	sbuiltua.aft	f_code	AL020	Built-Up Area
2	sbuiltua.aft	f_code	AL105	Settlement
3	sbuiltua.aft	f_code	AL135	Native Settlement
4	schanela.aft	f_code	BH020	Canal
5	schanela.aft	f_code	BH030	Ditch
6	schanela.aft	f_code	BH140	River/Stream
7	smvoida.aft	f_code	ZD020	Void Collection Area
8	soila.aft	f_code	BJ100	Snow Field/Ice Field
9	soila.aft	f_code	DA010	Ground Surface Element
10	swatera.aft	f_code	AC030	Settling Basin/Sludge Pond
11	swatera.aft	f_code	BA040	Water (Except Inland)
12	swatera.aft	f_code	BH040	Filtration Beds/Aeration Beds
13	swatera.aft	f_code	BH050	Fish Hatchery/Fish Farm/Marine Farm
14	swatera.aft	f_code	BH080	Lake/Pond
15	swatera.aft	f_code	BH130	Reservoir
16	swatera.aft	f_code	BH155	Salt Evaporator
17	fca	type	A	Area Feature

E.3.12.1 Soil/Surface Materials coverage glossary.

AC030 Settling Basin/Sludge Pond (A) A site where solid matter is precipitated from a liquid by evaporating or settling.

AL020 Built-Up Area (A) An area containing a concentration of buildings and other structures.

AL105 Settlement (A) A concentration of small dwellings.
PPT Populated Place Type (A) The type of populated place.

AL135 Native Settlement (A) A concentration of native dwellings, generally of the hut type, which are not usually of substantial construction.

BA040 Water (Except Inland) (A) An area of water which normally has tidal fluctuations.

BH020 Canal (A) A manmade or improved natural waterway used for transportation.

BH030 Ditch (A) A channel constructed for the purpose of irrigation or drainage.

BH040 Filtration Beds/Aeration Beds (A) An area containing layers of material used to filter or aerate water.

BH050 Fish Hatchery/Fish Farm/Marine Farm (A) An enclosure of water for the breeding and/or rearing of fish.

BH080 Lake/Pond (A) A body of water surrounded by land. (See also BH130)

BH130 Reservoir (A) A man made open enclosure or area formed for the storage of water. (See also BH080)

BH140 River/Stream (A) A natural flowing watercourse.

BH155 Salt Evaporator (A) Shallow pools, normally man made, used for natural evaporation of water for the collection of salt.

BJ100 Snow Field/Ice Field (A) A large area permanently covered by snow or ice over land or water.
SM1 Surficial Material Depth Category (A) Estimated general depth of soil or unconsolidated surface materials, expressed in 0.5 meter increments.
SRD Surface Roughness Description (A) Describes the condition of the surface materials that maybe used for mobility prediction, construction material, and landing sites.
SWC Soil Wetness Condition (A) General moisture content or condition of a soil.

DA010 Ground Surface Element (A) The surface soil characteristics of the earth.
SM1 Surficial Material Depth Category (A) Estimated general depth of soil or unconsolidated surface materials, expressed in 0.5 meter increments.
SMC Surface Material Category (A) Surface material composition excluding internal structural material.
SRD Surface Roughness Description (A) Describes the condition of the surface materials that maybe used for mobility prediction, construction material, and landing sites.
STG Soil Trafficability Group (Derived from STP) (A) Soils described by the Unified Soil Classification System categorized by their wet weather trafficability characteristics.
STP Soil Types (A) Soil categories described by the Unified Soil Classification System (USCS).
SWC Soil Wetness Condition (A) General moisture content or condition of a soil.
YSD Soil Depth with Greater Precision (A) Ranges of detailed depth (meters) of soil or unconsolidated material over bedrock.
YWT Depth to Water Table (A) Ranges of average depth (meters) of a zone of saturation except where bounded by an impermeable body, in which case no water table exists.

ZD020 Void Collection Area (A) An area lacking suitable source coverage, or where data is not required.
VCA Void Collection Attribute (A) Reason data is not collected.

TABLE E-226. Soil/Surface Materials Integer Value Description Table.

Thematic Layer: Soil/Surface Materials
Coverage Name: smc
Table Description: Soil/Surface Materials Integer Value Description Table
Table Name: int.vdt
DQ Layer Number: 10

{Header length}L;
Soil/Surface Materials Integer Value Description Table;-;
id=I,1,P,Row Identifier,-,-,-,:
table=T,12,N,Feature Class Table Name,-,-,-,:
attribute=T,3,N,Attribute Name,-,-,-,:
value=S,1,N,Attribute Value,-,-,-,:
description=T,*,N,Attribute Value Description,-,-,-,:;

1	sbuiltua.aft	ppt	0	Unknown
2	sbuiltua.aft	ppt	2	Shantytown
3	smvoida.aft	vca	0	Unknown
4	smvoida.aft	vca	2	Area Too Rough to Collect
5	smvoida.aft	vca	3	No Available Imagery
6	smvoida.aft	vca	6	No Available Map Source
7	smvoida.aft	vca	7	No Suitable Imagery
8	soila.aft	sm1	0	Unknown
9	soila.aft	sm1	1	< 0.5 (Meters)
10	soila.aft	sm1	2	>= 0.5 (Meters)
11	soila.aft	smc	0	Unknown
12	soila.aft	smc	84	Rock/Rocky
13	soila.aft	smc	104	Soil
14	soila.aft	srd	0	Unknown
15	soila.aft	srd	1	No surface roughness effect
16	soila.aft	srd	2	Area of high landslide potential
17	soila.aft	srd	11	Surface of numerous cobbles and boulders
18	soila.aft	srd	12	Areas of stony terrain
19	soila.aft	srd	13	Stony soil with surface rock
20	soila.aft	srd	14	Stony soil with scattered boulders
21	soila.aft	srd	15	Stony soil with numerous boulders
22	soila.aft	srd	16	Numerous boulders
23	soila.aft	srd	17	Numerous rock outcrops
24	soila.aft	srd	18	Area of scattered boulders
25	soila.aft	srd	19	Talus slope
26	soila.aft	srd	20	Boulder field
27	soila.aft	srd	31	Highly fractured rock surface
28	soila.aft	srd	32	Weathered lava flows
29	soila.aft	srd	33	Unweathered lava flows
30	soila.aft	srd	34	Stony soil with numerous rock outcrops
31	soila.aft	srd	35	Irregular surface with deep fractures of foliation

TABLE E-226. Soil/Surface Materials Integer Value Description Table (Continued).

32	soila.aft	srd	36	Rugged terrain with numerous rock outcrops
33	soila.aft	srd	37	Rugged bedrock surface
34	soila.aft	srd	38	Sand dunes
35	soila.aft	srd	39	Sand dunes/low
36	soila.aft	srd	40	Sand dunes/high
37	soila.aft	srd	41	Active sand dunes
38	soila.aft	srd	42	Stabilized sand dunes
39	soila.aft	srd	43	Highly distorted area, sharp rocky ridges
40	soila.aft	srd	51	Stony soil cut by numerous gullies
41	soila.aft	srd	52	Moderately dissected terrain
42	soila.aft	srd	53	Moderately dissected terrain with scattered rock outcrops
43	soila.aft	srd	54	Dissected floodplain
44	soila.aft	srd	55	Highly dissected terrain
45	soila.aft	srd	56	Area with deep erosional gullies
46	soila.aft	srd	57	Steep, rugged, dissected terrain with narrow gullies
47	soila.aft	srd	58	Karst/areas of numerous sinkholes and solution valleys
48	soila.aft	srd	59	Karst/area of numerous sinkholes
49	soila.aft	srd	60	Karst/hummocky terrain covered with large conical hills
50	soila.aft	srd	61	Karst/hummocky terrain covered with low, broad-based mounds
51	soila.aft	srd	62	Arroyo/wadi/wash
52	soila.aft	srd	63	Playa/dry lake
53	soila.aft	srd	64	Area of numerous meander scars and/or oxbow lakes
54	soila.aft	srd	65	Solifluction lobes and frost scars
55	soila.aft	srd	66	Hummocky ground, areas of frost heaving
56	soila.aft	srd	67	Area of frost polygons
57	soila.aft	srd	68	Area containing sabkhas
58	soila.aft	srd	69	Area of numerous small lakes and ponds
59	soila.aft	srd	70	Area of numerous crevasses
60	soila.aft	srd	81	Area of numerous terraces
61	soila.aft	srd	82	Quarries
62	soila.aft	srd	83	Strip mines
63	soila.aft	srd	84	Quarry/gravel pit
64	soila.aft	srd	85	Quarry/sand pit
65	soila.aft	srd	86	Mine tailings/waste piles
66	soila.aft	srd	87	Salt evaporators
67	soila.aft	srd	88	Area of numerous dikes
68	soila.aft	srd	89	Area of numerous diked fields
69	soila.aft	srd	90	Area of numerous fences
70	soila.aft	srd	91	Area of numerous stone walls

TABLE E-226. Soil/Surface Materials Integer Value Description Table (Continued).

71	soila.aft	srd	92	Area of numerous man-made canals/drains/ditches
72	soila.aft	srd	93	Area of numerous terraced fields
73	soila.aft	srd	94	Parallel earthen mounds (row crops)
74	soila.aft	srd	95	Area of numerous hedgerows
75	soila.aft	stg	0	Unknown
76	soila.aft	stg	1	A
77	soila.aft	stg	2	B
78	soila.aft	stg	3	C
79	soila.aft	stg	4	D
80	soila.aft	stg	5	E
81	soila.aft	stg	6	X
82	soila.aft	stp	0	Unknown
83	soila.aft	stp	1	GW Well graded gravels or gravel-sand mixtures
84	soila.aft	stp	2	GP Poorly graded gravels or gravel-sand mixtures
85	soila.aft	stp	3	GM Silty gravels, gravel-sand-silt mixtures
86	soila.aft	stp	4	GC Clayey gravels, gravel-sand-clay mixture
87	soila.aft	stp	5	SW Well graded sand or gravelly sands
88	soila.aft	stp	6	SP Poorly graded sands or gravelly sands
89	soila.aft	stp	7	SM Silty sands, sand-silt mixture
90	soila.aft	stp	8	SC Clayey sands, sand-clay mixtures
91	soila.aft	stp	9	ML Inorganic silts and very fine sands
92	soila.aft	stp	10	CL Inorganic clays of low to medium plasticity
93	soila.aft	stp	11	OL Organic silts and organic silty clays
94	soila.aft	stp	12	CH Inorganic clays of high plasticity, fat clays
95	soila.aft	stp	13	MH Inorganic silts, micaceous or diatomaceous
96	soila.aft	stp	14	OH Organic clays of medium to high plasticity
97	soila.aft	stp	15	PT Peat and other organic soils
98	soila.aft	stp	17	ML-CL Soil type having both ML and CL characteristics
99	soila.aft	stp	18	Evaporites
100	soila.aft	stp	999	Other
101	soila.aft	swc	0	Unknown
102	soila.aft	swc	1	Dry
103	soila.aft	swc	2	Moist
104	soila.aft	swc	3	Wet
105	soila.aft	swc	4	Frozen/Permafrost
106	soila.aft	ysd	0	Unknown

TABLE E-226. Soil/Surface Materials Integer Value Description Table (Continued).

107	soila.aft	ysd	1	< 0.25
108	soila.aft	ysd	2	>= 0.25 and < 0.5
109	soila.aft	ysd	3	>= 0.5 and < 1.5
110	soila.aft	ysd	4	>= 1.5 and < 2.5
111	soila.aft	ysd	5	>= 2.5 and < 5.0
112	soila.aft	ysd	6	>= 5.0 and < 10.0
113	soila.aft	ysd	7	>= 10.0
114	soila.aft	ywt	0	Unknown
115	soila.aft	ywt	1	> 0 and <= 0.3
116	soila.aft	ywt	2	> 0.3 and <= 1.2
117	soila.aft	ywt	3	> 1.2
118	soila.aft	ywt	4	At Ground Surface

E.3.13 Transportation coverage. Where roads, railroads, and other related features have associated linear bridges, tunnels, ferries, and fords, only those transportation 'connectors' are represented. The road or railroad terminates at those features and must be linked with the appropriate features through the topological relationship of the primitive. These feature classes include: as connectors - bridgel, ferryl, fordl, harborl, and tunnell; as connecting feature classes - raildrl, roadl, trackl, and traill.

TABLE E-227. Content and Format for Transportation Coverage Feature Class Schema Table.

Thematic Layer: Transportation
Coverage Name: trans
Feature Table Description: Transportation Feature Class Schema Table
Table Name: fcs
DQ Layer Number: 11

```
{Header length}L;
Transportation Feature Class Schema Table;-;
id=I,1,P,Row Identifier,-,-,-,:
feature_class=T,8,N,Name of Feature Class,-,-,-,:
table1=T,12,N,First Table,-,-,-,:
table1_key=T,16,N,Column Name in First Table,-,-,-,:
table2=T,12,N,Second Table,-,-,-,:
table2_key=T,16,N,Column Name in Second Table,-,-,-,:;
```

1	aerofacp	aerofacp.pft	end_id	end	id
2	aerofacp	end	id	aerofacp.pft	end_id
3	harborp	harborp.pft	end_id	end	id
4	harborp	end	id	harborp.pft	end_id
5	misaerop	misaerop.pft	end_id	end	id
6	misaerop	end	id	misaerop.pft	end_id
7	bridgec	bridgec.pft	cnd_id	cnd	id
8	bridgec	cnd	id	bridgec.pft	cnd_id
9	contric	contric.pft	cnd_id	cnd	id
10	contric	cnd	id	contric.pft	cnd_id
11	ferryc	ferryc.pft	cnd_id	cnd	id
12	ferryc	cnd	id	ferryc.pft	cnd_id
13	fordc	fordc.pft	cnd_id	cnd	id
14	fordc	cnd	id	fordc.pft	cnd_id
15	mtnpssc	mtnpssc.pft	cnd_id	cnd	id
16	mtnpssc	cnd	id	mtnpssc.pft	cnd_id
17	rrturnc	rrturnc.pft	cnd_id	cnd	id
18	rrturnc	cnd	id	rrturnc.pft	cnd_id
19	steepc	steepc.pft	cnd_id	cnd	id
20	steepc	cnd	id	steepc.pft	cnd_id
21	tunnelc	tunnelc.pft	cnd_id	cnd	id
22	tunnelc	cnd	id	tunnelc.pft	cnd_id
23	bridgel	bridgel.lft	id	bridgel.ljt	bridgel.lft_id
24	bridgel	bridgel.ljt	edg_id	edg	id
25	bridgel	edg	id	bridgel.ljt	edg_id
26	bridgel	bridgel.ljt	bridgel.lft_id	bridgel.lft	id
27	ferryl	ferryl.lft	id	ferryl.ljt	ferryl.lft_id

TABLE E-227. Content and Format for Transportation Coverage Feature Class Schema Table (Continued).

28	ferryl	ferryl.ljt	edg_id	edg	id
29	ferryl	edg	id	ferryl.ljt	edg_id
30	ferryl	ferryl.ljt	ferryl.lft_id	ferryl.lft	id
31	fordl	fordl.lft	id	fordl.ljt	fordl.lft_id
32	fordl	fordl.ljt	edg_id	edg	id
33	fordl	edg	id	fordl.ljt	edg_id
34	fordl	fordl.ljt	fordl.lft_id	fordl.lft	id
35	harborl	harborl.lft	id	harborl.ljt	harborl.lft_id
36	harborl	harborl.ljt	edg_id	edg	id
37	harborl	edg	id	harborl.ljt	edg_id
38	harborl	harborl.ljt	harborl.lft_id	harborl.lft	id
39	liftl	liftl.lft	id	liftl.ljt	liftl.lft_id
40	liftl	liftl.ljt	edg_id	edg	id
41	liftl	edg	id	liftl.ljt	edg_id
42	liftl	liftl.ljt	liftl.lft_id	liftl.lft	id
43	railrdl	railrdl.lft	id	railrdl.ljt	railrdl.lft_id
44	railrdl	railrdl.ljt	edg_id	edg	id
45	railrdl	edg	id	railrdl.ljt	edg_id
46	railrdl	railrdl.ljt	railrdl.lft_id	railrdl.lft	id
47	railrdl	railrdl.lft	id	railrdl.rjt	railrdl.lft_id
48	railrdl	railrdl.rjt	rat_id	raildrl.rat	id
49	railrdl	raildrl.rat	id	railrdl.rjt	rat_id
50	railrdl	railrdl.rjt	railrdl.lft_id	railrdl.lft	id
51	roadl	roadl.lft	id	roadl.ljt	roadl.lft_id
52	roadl	roadl.ljt	edg_id	edg	id
53	roadl	edg	id	roadl.ljt	edg_id
54	roadl	roadl.ljt	roadl.lft_id	roadl.lft	id
55	roadl	roadl.lft	id	roadl.rjt	roadl.lft_id
56	roadl	roadl.rjt	rat_id	roadl.rat	id
57	roadl	roadl.rat	id	roadl.rjt	rat_id
58	roadl	roadl.rjt	roadl.lft_id	roadl.lft	id
59	trackl	trackl.lft	id	trackl.ljt	trackl.lft_id
60	trackl	trackl.ljt	edg_id	edg	id
61	trackl	edg	id	trackl.ljt	edg_id
62	trackl	trackl.ljt	trackl.lft_id	trackl.lft	id
63	traill	traill.lft	id	traill.ljt	traill.lft_id
64	traill	traill.ljt	edg_id	edg	id
65	traill	edg	id	traill.ljt	edg_id
66	traill	traill.ljt	traill.lft_id	traill.lft	id
67	tunnell	tunnell.lft	id	tunnell.ljt	tunnell.lft_id
68	tunnell	tunnell.ljt	edg_id	edg	id
69	tunnell	edg	id	tunnell.ljt	edg_id
70	tunnell	tunnell.ljt	tunnell.lft_id	tunnell.lft	id
71	aerofaca	aerofaca.aft	id	aerofaca.ajt	aerofaca.aft_id
72	aerofaca	aerofaca.ajt	fac_id	fac	id
73	aerofaca	fac	id	aerofaca.ajt	fac_id
74	aerofaca	aerofaca.ajt	aerofaca.aft_id	aerofaca.aft	id
75	harbora	harbora.aft	id	harbora.ajt	harbora.aft_id
76	harbora	harbora.ajt	fac_id	fac	id
77	harbora	fac	id	harbora.ajt	fac_id

TABLE E-227. Content and Format for Transportation Coverage Feature Class Schema Table (Continued).

78	harbora	harbora.ajt	harbora.aft_id	harbora.aft	id
79	resta	resta.aft	id	resta.ajt	resta.aft_id
80	resta	resta.ajt	fac_id	fac	id
81	resta	fac	id	resta.ajt	fac_id
82	resta	resta.ajt	resta.aft_id	resta.aft	id
83	rryarda	rryarda.aft	id	rryarda.ajt	rryarda.aft_id
84	rryarda	rryarda.ajt	fac_id	fac	id
85	rryarda	fac	id	rryarda.ajt	fac_id
86	rryarda	rryarda.ajt	rryarda.aft_id	rryarda.aft	id
87	runwaya	runwaya.aft	id	runwaya.ajt	runwaya.aft_id
88	runwaya	runwaya.ajt	fac_id	fac	id
89	runwaya	fac	id	runwaya.ajt	fac_id
90	runwaya	runwaya.ajt	runwaya.aft_id	runwaya.aft	id
91	storveha	storveha.aft	id	storveha.ajt	storveha.aft_id
92	storveha	storveha.ajt	fac_id	fac	id
93	storveha	fac	id	storveha.ajt	fac_id
94	storveha	storveha.ajt	storveha.aft_id	storveha.aft	id
95	travoida	travoida.aft	id	travoida.ajt	travoida.aft_id
96	travoida	travoida.ajt	fac_id	fac	id
97	travoida	fac	id	travoida.ajt	fac_id
98	travoida	travoida.ajt	travoida.aft_id	travoida.aft	id
99	transtxt	transtxt.tft	txt_id	txt	id
100	transtxt	txt	id	transtxt.tft	txt_id

TABLE E-228. Aircraft Facility Point Feature Table.

Thematic Layer: Transportation
Coverage Name: trans
Feature Table Description: Aircraft Facility Point Feature Table
Table Name: aerofacp.pft
DQ Layer Number: 11
Portrayal Criteria: For GB005 if limits and information is unknown, the feature is represented as a point.

```
{Header length}L;
Aircraft Facility Point Feature Table;-;
id=I,1,P,Row Identifier,-,-,-,:
f_code=T,5,N,FACC Feature Code,char.vdt,f_code1.pti,-,:
apt=S,1,N,Airfield Type,int.vdt,-,-,:
cod=S,1,N,Certainty of Delineation,int.vdt,-,-,:
exs=S,1,N,Existence Category,int.vdt,-,-,:
nam=T,*,N,Name,char.vdt,-,-,:
use=S,1,N,Usage,int.vdt,-,-,:
tile_id=S,1,N,Tile Reference ID,-,tile1_id.pti,-,:
end_id=I,1,N,Entity Node Primitive ID,-,end1_id.pti,-,:;
```

Column	Description	Value	Value Meaning	Applicable f_code for Each Attribute Value
id	Row Identifier	Sequential beginning with 1		
f_code	FACC Feature Code			
		GB005	Airport/Airfield	
		GB030	Helicopter Landing Pad	
apt	Airfield Type			
		0	Unknown	GB005, GB030
		4	Seaplane Base	GB005
		9	Heliport	GB005, GB030
		11	Heliport at Hospital	GB030
		14	Airport/Airfield	GB005
cod	Certainty of Delineation			
		-32768	Null	GB030
		1	Limits and Information Known	GB005
		2	Limits and Information Unknown	GB005
exs	Existence Category (some value added)			
		-32768	Null	GB030
		0	Unknown	GB005
		6	Abandoned/Disused	GB005
		28	Operational	GB005
		5	Under Construction (v/a)	GB005
		7	Destroyed (v/a)	GB005
		601	Damaged (v/a)	GB005

TABLE E-228. Aircraft Facility Point Feature Table (Continued).

nam	Name			
		Character text string		GB005, GB030
		UNK (No entry present)		GB005, GB030
use	Usage			
		0	Unknown	GB005, GB030
		8	Military	GB005
		22	Joint Military/Civilian	GB005
		23	International	GB005
		49	Civilian/Public	GB005
		999	Other	GB030

TABLE E-229. Harbor Point Feature Table.

Thematic Layer: Transportation
Coverage Name: trans
Feature Table Description: Harbor Point Feature Table
Table Name: harborp.pft
DQ Layer Number: 11
Portrayal Criteria: For BB010 area < 15,625 square meters.

```
{Header length}L;
Harbor Point Feature Table;-;
id=I,1,P,Row Identifier,-,-,-,:
f_code=T,5,N,FACC Feature Code,char.vdt,-,-,:
mac=S,1,N,Maritime Area Category,int.vdt,-,-,:
tile_id=S,1,N,Tile Reference ID,-,tile2_id.pti,-,:
end_id=I,1,N,Entity Node Primitive ID,-,end2_id.pti,-,:;
```

Column	Description	Value	Value Meaning	Applicable f_code for Each Attribute Value
id	Row Identifier	Sequential beginning with 1		
f_code	FACC Feature Code			
		BB010	Anchorage	
mac	Maritime Area Category			
		0	Unknown	BB010
		53	Seaplane Anchorage	BB010

TABLE E-230. Miscellaneous Aeronautical Point Feature Table.

Thematic Layer: Transportation
Coverage Name: trans
Feature Table Description: Miscellaneous Aeronautical Point Feature Table
Table Name: misaerop.pft
DQ Layer Number: 11

```
{Header length}L;
Miscellaneous Aeronautical Point Feature Table;-;
id=I,1,P,Row Identifier,-,-,-,:
f_code=T,5,N,FACC Feature Code,char.vdt,f_code3.pti,-,:
exs=S,1,N,Existence Category,int.vdt,-,-,:
hgt=S,1,N,Height Above Surface Level (meters),int.vdt,-,-,:
lfa=S,1,N,Light Function Aeronautical,int.vdt,-,-,:
zv2=S,1,N,Highest Z-value (meters),int.vdt,-,-,:
tile_id=S,1,N,Tile Reference ID,-,tile3_id.pti,-,:
end_id=I,1,N,Entity Node Primitive ID,-,end3_id.pti,-,:;
```

Column	Description	Value	Value Meaning	Applicable f_code for Each Attribute Value
id	Row Identifier	Sequential beginning with 1		
f_code	FACC Feature Code			
		AQ060	Control Tower	
		AQ110	Mooring Mast	
		GB010	Airport Lighting	
exs	Existence Category			
		-32768	Null	GB010
		0	Unknown	AQ060,AQ110
		1	Definite	AQ060,AQ110
		2	Doubtful	AQ060,AQ110
		3	Reported	AQ060,AQ110
hgt	Height Above Surface Level (meters)			
		-32768	Null	GB010
		0	Unknown	AQ060,AQ110
		> 0		AQ060,AQ110
lfa	Light Function Aeronautical			
		-32768	Null	AQ060,AQ110
		0	Unknown	GB010
		10	Rotating Beacon	GB010
		26	Strobe	GB010
		53	Beacon	GB010
zv2	Highest Z-value (meters)			
		-32768	Null	GB010
		29999	Unknown	AQ060,AQ110
		-400 to 11999		AQ060,AQ110

TABLE E-231. Bridge Node Feature Table.

Thematic Layer: Transportation
Coverage Name: trans
Feature Table Description: Bridge Node Feature Table
Table Name: bridgec.pft
DQ Layer Number: 11
Portrayal Criteria: For AQ040 length < 75 meters. For railroad bridges, only, bot, exs, len, tuc, and ohc will be populated, all other attributes will be null.

```
{Header length}L;
Bridge Node Feature Table;-;
id=I,1,P,Row Identifier,-,-,-,:
f_code=T,5,N,FACC Feature Code,char.vdt,f_code1.nti,-,:
bcc=S,1,N,Bypass Condition Category,int.vdt,-,-,:
bot=S,1,N,Bridge Opening Type,int.vdt,-,-,:
bsc=S,1,N,Bridge/Bridge Superstructure Category,int.vdt,-,-,:
exs=S,1,N,Existence Category,int.vdt,-,-,:
hca=S,1,N,Horizontal Clearance Attribute (decimeters),int.vdt,-,-,:
idn=S,1,N,Identification Number,int.vdt,-,-,:
lc1=S,1,N,Load Class Type 1,int.vdt,-,-,:
lc2=S,1,N,Load Class Type 2,int.vdt,-,-,:
lc3=S,1,N,Load Class Type 3,int.vdt,-,-,:
lc4=S,1,N,Load Class Type 4,int.vdt,-,-,:
len=S,1,N,Length/Diameter (meters),int.vdt,-,-,:
mcc=S,1,N,Material Composition Category,int.vdt,-,-,:
nos=S,1,N,Number of Spans,int.vdt,-,-,:
ohc=S,1,N,Overhead Clearance Category (decimeters),int.vdt,-,-,:
tuc=S,1,N,Transportation Use Category,int.vdt,-,-,:
ubc=S,1,N,Underbridge Clearance Category (decimeters),int.vdt,-,-,:
wd1=S,1,N,Minimum Traveled Way Width (decimeters),int.vdt,-,-,:
wt2=S,1,N,Width of Second Traveled Way (decimeters),int.vdt,-,-,:
yln=S,1,N,Length of Greater Precision (decimeters),int.vdt,-,-,:
tile_id=S,1,N,Tile Reference ID,-,tile1_id.nti,-,:
cnd_id=I,1,N,Connected Node Primitive ID,-,cnd1_id.nti,-,:;
```

Column	Description	Value	Value Meaning	Applicable f_code for Each Attribute Value
id	Row Identifier	Sequential beginning with 1		
f_code	FACC Feature Code			
		AQ040	Bridge/Overpass/Viaduct	
		AQ045	Bridge Span	
bcc	Bypass Condition Category			
		-32768	Null	AQ040 tuc=3, AQ045
		0	Unknown	AQ040 tuc<>3
		1	Easy	AQ040 tuc<>3
		2	Difficult	AQ040 tuc<>3
		3	Impossible	AQ040 tuc<>3

TABLE E-231. Bridge Node Feature Table (Continued).

bot	Bridge Opening Type			
		-32768	Null	AQ045
		0	Unknown	AQ040
		4	Draw/Bascule	AQ040
		10	Swing	AQ040
		11	Lift	AQ040
		12	Retractile	AQ040
		13	Not Applicable	AQ040
bsc	Bridge/Bridge Superstructure Category			
		-32768	Null	AQ040 tuc=3, AQ045
		0	Unknown	AQ040 tuc<>3
		1	Arch (assume open spandrel)	AQ040 tuc<>3
		2	Cantilever	AQ040 tuc<>3
		3	Deck	AQ040 tuc<>3
		5	Floating Bridge/Pontoon	AQ040 tuc<>3
		6	Girder	AQ040 tuc<>3
		8	Truss	AQ040 tuc<>3
		9	Suspension	AQ040 tuc<>3
		12	Transporter	AQ040 tuc<>3
		15	Slab	AQ040 tuc<>3
		16	Stringer (beam)	AQ040 tuc<>3
		26	Arch (closed spandrel)	AQ040 tuc<>3
		27	Cable Stayed	AQ040 tuc<>3
		999	Other	AQ040 tuc<>3
exs	Existence Category			
		-32768	Null	AQ045
		0	Unknown	AQ040
		5	Under Construction	AQ040
		28	Operational	AQ040
		7	Destroyed (value added)	AQ040
hca	Horizontal Clearance Attribute (decimeters)			
		-32768	Null	AQ040 tuc=3, AQ045
		0	Unknown	AQ040 tuc<>3
		>0		AQ040 tuc<>3
idn	Identification Number			
		-32768	Null	AQ040 tuc=3
		0	Unknown	AQ040 tuc<>3,AQ045
		>0		AQ040 tuc<>3,AQ045
lc1	Load Class Type 1			
		-32768	Null	AQ040 tuc=3, AQ045
		0	Unknown	AQ040 tuc<>3
		>0		AQ040 tuc<>3

TABLE E-231. Bridge Node Feature Table (Continued).

lc2	Load Class Type 2			
		-32768	Null	AQ040 tuc=3, AQ045
		0	Unknown	AQ040 tuc<>3
		>0		AQ040 tuc<>3
lc3	Load Class Type 3			
		-32768	Null	AQ040 tuc=3, AQ045
		0	Unknown	AQ040 tuc<>3
		>0		AQ040 tuc<>3
lc4	Load Class Type 4			
		-32768	Null	AQ040 tuc=3, AQ045
		0	Unknown	AQ040 tuc<>3
		>0		AQ040 tuc<>3
len	Length/Diameter (meters)			
		-32768	Null	AQ045
		0	Unknown	AQ040
		<75		AQ040
mcc	Material Composition Category			
		-32768	Null	AQ040
		0	Unknown	AQ045
		21	Concrete	AQ045
		62	Masonry (Brick/Stone)	AQ045
		77	Prestressed Concrete	AQ045
		83	Reinforced Concrete	AQ045
		107	Steel	AQ045
		108	Stone	AQ045
		117	Wood	AQ045
		999	Other	AQ045
nos	Number of Spans			
		-32768	Null	AQ040 tuc=3, AQ045
		0	Unknown	AQ040 tuc<>3
		> 0		AQ040 tuc<>3
ohc	Overhead Clearance Category (decimeters)			
		-32768	Null	AQ045
		0	Unknown	AQ040
		> 0		AQ040
		501	Unlimited	AQ040
		502	Restricted	AQ040

TABLE E-231. Bridge Node Feature Table (Continued).

tuc	Transportation Use Category			
		-32768	Null	AQ045
		0	Unknown	AQ040
		1	Both Road and Railroad	AQ040
		3	Railroad	AQ040
		4	Road	AQ040
ubc	Underbridge Clearance Category (decimeters)			
		-32768	Null	AQ040 tuc=3, AQ045
		0	Unknown	AQ040 tuc<>3
		> 0		AQ040 tuc<>3
wd1	Minimum Traveled Way Width (decimeters)			
		-32768	Null	AQ040 tuc=3, AQ045
		0	Unknown	AQ040 tuc<>3
		> 0		AQ040 tuc<>3
wt2	Width of Second Traveled Way (decimeters)			
		-32768	Null	AQ040 tuc=3, AQ045
		0	Unknown	AQ040 tuc<>3
		> 0		AQ040 tuc<>3
yln	Length of Greater Precision (decimeters)			
		-32768	Null	AQ040
		0	Unknown	AQ045
		> 0		AQ045

TABLE E-232. Constriction Node Feature Table.

Thematic Layer: Transportation
Coverage Name: trans
Feature Table Description: Constriction Node Feature Table
Table Name: contric.pft
DQ Layer Number: 11
Portrayal Criteria: For AQ118 radius < 30 meters and AQ065 width >= 2.5 meters, all features are associated on portrayed roads and railroads. For AQ058 length <= 300 meters and width < 4 meters will be included as related to constriction only not as a drop gate, and transportation use category will be implemented for drop gates only, the value 'unknown' will be the default for other type of constrictions.

```
{Header length}L;
Constriction Node Feature Table;-;
id=I,1,P,Row Identifier,-,-,-,:
f_code=T,5,N,FACC Feature Code,char.vdt,f_code2.nti,-,:
len=S,1,N,Length/Diameter (meters),int.vdt,-,-,:
tuc=S,1,N,Transportation Use Category,int.vdt,-,-,:
wd1=S,1,N,Minimum Traveled Way Width (decimeters),int.vdt,-,-,:
wd2=S,1,N,Total Usable Width (decimeters),int.vdt,-,-,:
tile_id=S,1,N,Tile Reference ID,-,tile2_id.nti,-,:
cnd_id=I,1,N,Connected Node Primitive ID,-,cnd2_id.nti,-,:;
```

Column	Description	Value	Value Meaning	Applicable f_code for Each Attribute Value
id	Row Identifier	Sequential beginning with 1		
f_code	FACC Feature Code			
		AQ058	Constriction/Expansion	
		AQ065	Culvert	
		AQ118	Sharp Curve	
len	Length/Diameter (meters)			
		-32768	Null	AQ065,AQ118
		0	Unknown [drop gate]	AQ058
		>0 and <=300	[constriction]	AQ058
tuc	Transportation Use Category			
		-32768	Null	AQ065,AQ118
		0	Unknown	AQ058
		3	Railroad	AQ058
		4	Road	AQ058
wd1	Minimum Traveled Way Width (decimeters)			
		-32768	Null	AQ065,AQ118
		0	Unknown	AQ058
		<40		AQ058

TABLE E-232. Constriction Node Feature Table (Continued).

wd2	Total Usable Width (decimeters)			
		-32768	Null	AQ058,AQ118
		0	Unknown	AQ065
		>=25		AQ065

TABLE E-233. Ferry Crossing Node Feature Table.

Thematic Layer: Transportation
Coverage Name: trans
Feature Table Description: Ferry Crossing Node Feature Table
Table Name: ferryc.pft
DQ Layer Number: 11
Portrayal Criteria: For AQ070 length < 25 meters.

```
{Header length}L;
Ferry Crossing Node Feature Table;-;
id=I,1,P,Row Identifier,-,-,-,:
f_code=T,5,N,FACC Feature Code,char.vdt,-,-,:
exs=S,1,N,Existence Category,int.vdt,-,-,:
fcl=S,1,N,Ferry Crossing Length (meters),int.vdt,-,-,:
tuc=S,1,N,Transportation Use Category,int.vdt,-,-,:
tile_id=S,1,N,Tile Reference ID,-,tile3_id.nti,-,:
cnd_id=I,1,N,Connected Node Primitive ID,-,cnd3_id.nti,-,:;
```

Column	Description	Value	Value Meaning	Applicable f_code for Each Attribute Value
id	Row Identifier	Sequential beginning with 1		
f_code	FACC Feature Code			
		AQ070	Ferry Crossing	
exs	Existence Category (value added)			
		0	Unknown (default)	AQ070
		5	Under Construction	AQ070
		6	Abandoned/Disused	AQ070
		7	Destroyed	AQ070
		28	Operational	AQ070
		601	Damaged	AQ070
fcl	Ferry Crossing Length (meters)			
		0	Unknown	AQ070
		< 25		AQ070
tuc	Transportation Use Category			
		0	Unknown	AQ070
		1	Both Road and Railroad	AQ070
		3	Railroad	AQ070
		4	Road	AQ070

TABLE E-234. Ford Node Feature Table.

Thematic Layer: Transportation
Coverage Name: trans
Feature Table Description: Ford Node Feature Table
Table Name: fordc.pft
DQ Layer Number: 11
Portrayal Criteria: For BH070 length < 25 meters and associated with delineated transportation feature.

```
{Header length}L;
Ford Node Feature Table;-;
id=I,1,P,Row Identifier,-,-,-,:
f_code=T,5,N,FACC Feature Code,char.vdt,-,-,:
tile_id=S,1,N,Tile Reference ID,-,tile4_id.nti,-,:
cnd_id=I,1,N,Connected Node Primitive ID,-,cnd4_id.nti,-,:;
```

Column	Description	Value	Value Meaning	Applicable f_code for Each Attribute Value
id	Row Identifier	Sequential beginning with 1		
f_code	FACC Feature Code			
		BH070	Ford	

TABLE E-235. Mountain Pass Node Feature Table.

Thematic Layer: Transportation
Coverage Name: trans
Feature Table Description: Mountain Pass Node Feature Table
Table Name: mtnpssc.pft
DQ Layer Number: 11
Portrayal Criteria: For DB150 is a prominent feature and associated with portrayed transportation feature.

```
{Header length}L;
Mountain Pass Node Feature Table;-;
id=I,1,P,Row Identifier,-,-,-,:
f_code=T,5,N,FACC Feature Code,char.vdt,-,-,:
nam=T,*,N,Name,char.vdt,-,-,:
zv2=S,1,N,Highest Z-value (meters),int.vdt,-,-,:
tile_id=S,1,N,Tile Reference ID,-,tile5_id.nti,-,:
cnd_id=I,1,N,Connected Node Primitive ID,-,cnd5_id.nti,-,:;
```

Column	Description	Value	Value Meaning	Applicable f_code for Each Attribute Value
id	Row Identifier	Sequential beginning with 1		
f_code	FACC Feature Code			
		DB150	Mountain Pass	
nam	Name			
		Character text string		DB150
		"UNK" (No entry present)		DB150
zv2	Highest Z-value (meters)			
		29999	Unknown	DB150
		-400 to 11999		DB150

TABLE E-236. Railroad Turntable Node Feature Table.

Thematic Layer: Transportation
Coverage Name: trans
Feature Table Description: Railroad Turntable Node Feature Table
Table Name: rrturnc.pft
DQ Layer Number: 11
Portrayal Criteria: For AN075 associated with portrayed feature and prominent feature.

```
{Header length}L;
Railroad Turntable Node Feature Table;-;
id=I,1,P,Row Identifier,-,-,-,:
f_code=T,5,N,FACC Feature Code,char.vdt,-,-,:
tile_id=S,1,N,Tile Reference ID,-,tile6_id.nti,-,:
cnd_id=I,1,N,Connected Node Primitive ID,-,cnd6_id.nti,-,:;
```

Column	Description	Value	Value Meaning	Applicable f_code for Each Attribute Value
id	Row Identifier	Sequential beginning with 1		
f_code	FACC Feature Code			
		AN075	Railroad Turntable	

TABLE E-237. Steep Grade Node Feature Table.

Thematic Layer: Transportation
Coverage Name: trans
Feature Table Description: Steep Grade Node Feature Table
Table Name: steepc.pft
DQ Layer Number: 12
Portrayal Criteria: Feature associated with railroad segment that has >= 3% grade and length < 300 meters or road segment that has >=7% grade and length < 300 meters. If the road or railroad segment has length >=300 meters, the gradient will be captured in the SGC attribute on the road or railroad feature.

```
{Header length}L;
Steep Grade Node Feature Table;-;
id=I,1,P,Row Identifier,-,-,-,:
f_code=T,5,N,FACC Feature Code,char.vdt,-,-,:
sgc=S,1,N,Gradient/Slope (percent),int.vdt,-,-,:
tuc=S,1,N,Transportation Use Category,int.vdt,-,-,:
tile_id=S,1,N,Tile Reference ID,-,tile7_id.nti,-,:
cnd_id=I,1,N,Connected Node Primitive ID,-,cnd7_id.nti,-,:;
```

Column	Description	Value	Value Meaning	Applicable f_code for Each Attribute Value
id	Row Identifier	Sequential beginning with 1		
f_code	FACC Feature Code			
		AQ120	Steep Grade	
sgc	Gradient/Slope (percent)			
		999	Unknown	AQ120
		>= 3		AQ120 tuc=1 or 3
		>= 7		AQ120 tuc=4
tuc	Transportation Use Category			
		0	Unknown	AQ120
		1	Both Road and Railroad	AQ120
		3	Railroad	AQ120
		4	Road	AQ120

TABLE E-238. Tunnel Node Feature Table.

Thematic Layer: Transportation
Coverage Name: trans
Feature Table Description: Tunnel Node Feature Table
Table Name: tunnelc.pft
DQ Layer Number: 11
Portrayal Criteria: For AL075 and AQ130 length <75 meters, for AL210 length < 40 meters and with AL155 must be associated with protrayed road or railroad.

```
{Header length}L;
Tunnel Node Feature Table;-;
id=I,1,P,Row Identifier,-,-,-,:
f_code=T,5,N,FACC Feature Code,char.vdt,f_code8.nti,-,:
exs=S,1,N,Existence Category,int.vdt,-,-,:
hca=S,1,N,Horizontal Clearance Attribute (decimeters),int.vdt,-,-,:
len=S,1,N,Length/Diameter (meters),int.vdt,-,-,:
nam=T,*,N,Name,char.vdt,-,-,:
ohc=S,1,N,Overhead Clearance Category (decimeters),int.vdt,-,-,:
tuc=S,1,N,Transportation Use Category,int.vdt,-,-,:
use=S,1,N,Usage,int.vdt,-,-,:
tile_id=S,1,N,Tile Reference ID,-,tile8_id.nti,-,:
cnd_id=I,1,N,Connected Node Primitive ID,-,cnd8_id.nti,-,:;
```

Column	Description	Value	Value Meaning	Applicable f_code for Each Attribute Value
id	Row Identifier	Sequential beginning with 1		
f_code	FACC Feature Code			
		AL075	Gallery	
		AL155	Overhead Obstruction Location	
		AL210	Snow Shed/Rock Shed	
		AQ130	Tunnel	
exs	Existence Category			
		-32768	Null	AL155
		0	Unknown	AL075,AL210,AQ130
		5	Under Construction	AL075,AL210,AQ130
		28	Operational	AL075,AL210,AQ130
hca	Horizontal Clearance Attribute (decimeters)			
		0	Unknown	AL075,AL155, AL210,AQ130
		>0		AL075,AL155, AL210,AQ130
len	Length/Diameter (meters)			
		-32768	Null	AL155
		0	Unknown	AL075,AL210,AQ130
		<75		AL075,AQ130
		<40		AL210

TABLE E-238. Tunnel Node Feature Table (Continued).

nam	Name			
	Variable length text			
		= zero-length	Null	AL075,AL155,AL210
		Character Text String		AQ130
		UNK (No entry present)		AQ130
ohc	Overhead Clearance Category (decimeters)			
		0	Unknown	AL075,AL155, AL210,AQ130
		>0		AL075,AL155, AL210,AQ130
tuc	Transportation Use Category			
		0	Unknown	AL075,AL155, AL210,AQ130
		1	Both Road and Railroad	AQ130,AL210, AL075,AL155
		3	Railroad	AQ130,AL210, AL075,AL155
		4	Road	AQ130,AL210, AL075,AL155
use	Usage			
		-32768	Null	AL075,AL155,AQ130
		0	Unknown	AL210
		115	Snow Shed	AL210
		116	Rock Shed	AL210

TABLE E-239. Bridge Line Join Table.

(This table is used to combine linear transportation features with their associated edge primitives in a one-to-many relationship.)

```
{Header length}L;
Bridge Line Join Table;-;
id=I,1,P,Row Identifier,-,-,-,:
bridgel.lft_id=I,1,N,Feature Key,-,bridgel.jti,-,:
tile_id=S,1,N,Tile Reference ID,-,tile1_id.jti,-,:
edg_id=I,1,N,Edge Primitive ID,-,edg1_id.jti,-,:;
```

TABLE E-240. Bridge Line Feature Table.

Thematic Layer: Transportation
Coverage Name: trans
Feature Table Description: Bridge Line Feature Table
Table Name: bridgel.lft
DQ Layer Number: 11
Portrayal Criteria: For AQ040 length >= 75 meters. For railroad bridges, only bot, exs, len, tuc, and ohc will be populated, all other attributes will be null.

```
{Header length}L;
Bridge Line Feature Table;-;
id=I,1,P,Row Identifier,-,-,-,:
f_code=T,5,N,FACC Feature Code,char.vdt,-,-,:
bcc=S,1,N,Bypass Condition Category,int.vdt,-,-,:
bot=S,1,N,Bridge Opening Type,int.vdt,-,-,:
bsc=S,1,N,Bridge/Bridge Superstructure Category,int.vdt,-,-,:
exs=S,1,N,Existence Category,int.vdt,-,-,:
hca=S,1,N,Horizontal Clearance Attribute (decimeters),int.vdt,-,-,:
idn=S,1,N,Identification Number,int.vdt,-,-,:
lc1=S,1,N,Load Class Type 1,int.vdt,-,-,:
lc2=S,1,N,Load Class Type 2,int.vdt,-,-,:
lc3=S,1,N,Load Class Type 3,int.vdt,-,-,:
lc4=S,1,N,Load Class Type 4,int.vdt,-,-,:
len=S,1,N,Length/Diameter (meters),int.vdt,-,-,:
nos=S,1,N,Number of Spans,int.vdt,-,-,:
ohc=S,1,N,Overhead Clearance Category (decimeters),int.vdt,-,-,:
tuc=S,1,N,Transportation Use Category,int.vdt,-,-,:
ubc=S,1,N,Underbridge Clearance Category (decimeters),int.vdt,-,-,:
wd1=S,1,N,Minimum Traveled Way Width (decimeters),int.vdt,-,-,:
wt2=S,1,N,Width of Second Traveled Way (decimeters) Way,int.vdt,-,-,:;
```

Column	Description	Value	Value Meaning	Applicable f_code for Each Attribute Value
id	Row Identifier	Sequential beginning with 1		
f_code	FACC Feature Code			
		AQ040	Bridge/Overpass/Viaduct	

TABLE E-240. Bridge Line Feature Table (Continued).

bcc	Bypass Condition Category			
		-32768	Null	AQ040 tuc=3
		0	Unknown	AQ040 tuc<>3
		1	Easy	AQ040 tuc<>3
		2	Difficult	AQ040 tuc<>3
		3	Impossible	AQ040 tuc<>3
bot	Bridge Opening Type			
		0	Unknown	AQ040
		4	Draw/Bascule	AQ040
		10	Swing	AQ040
		11	Lift	AQ040
		12	Retractile	AQ040
		13	Not Applicable	AQ040
bsc	Bridge/Bridge Superstructure Category			
		-32768	Null	AQ040 tuc=3
		0	Unknown	AQ040 tuc<>3
		1	Arch (assume open spandrel)	AQ040 tuc<>3
		2	Cantilever	AQ040 tuc<>3
		3	Deck	AQ040 tuc<>3
		5	Floating Bridge/Pontoon	AQ040 tuc<>3
		6	Girder	AQ040 tuc<>3
		8	Truss	AQ040 tuc<>3
		9	Suspension	AQ040 tuc<>3
		12	Transporter	AQ040 tuc<>3
		15	Slab	AQ040 tuc<>3
		16	Stringer (beam)	AQ040 tuc<>3
		26	Arch (closed spandrel)	AQ040 tuc<>3
		27	Cable Stayed	AQ040 tuc<>3
		999	Other	AQ040 tuc<>3
exs	Existence Category			
		0	Unknown	AQ040
		5	Under Construction	AQ040
		28	Operational	AQ040
		7	Destroyed (value added)	AQ040
hca	Horizontal Clearance Attribute (decimeters)			
		-32768	Null	AQ040 tuc=3
		0	Unknown	AQ040 tuc<>3
		>0		AQ040 tuc<>3
idn	Identification Number			
		-32768	Null	AQ040 tuc=3
		0	Unknown	AQ040 tuc<>3
		>0		AQ040 tuc<>3

TABLE E-240. Bridge Line Feature Table (Continued).

lc1	Load Class Type 1			
		-32768	Null	AQ040 tuc=3
		0	Unknown	AQ040 tuc<>3
		>0		AQ040 tuc<>3
lc2	Load Class Type 2			
		-32768	Null	AQ040 tuc=3
		0	Unknown	AQ040 tuc<>3
		>0		AQ040 tuc<>3
lc3	Load Class Type 3			
		-32768	Null	AQ040 tuc=3
		0	Unknown	AQ040 tuc<>3
		>0		AQ040 tuc<>3
lc4	Load Class Type 4			
		-32768	Null	AQ040 tuc=3
		0	Unknown	AQ040 tuc<>3
		>0		AQ040 tuc<>3
len	Length/Diameter (meters)			
		0	Unknown	AQ040
		>= 75		AQ040
nos	Number of Spans			
		-32768	Null	AQ040 tuc=3
		0	Unknown	AQ040 tuc<>3
		> 0		AQ040 tuc<>3
ohc	Overhead Clearance Category (decimeters)			
		0	Unknown (default)	AQ040
		> 0		AQ040
		501	Unlimited	AQ040
		502	Restricted	AQ040
tuc	Transportation Use Category			
		0	Unknown	AQ040
		1	Both Road and Railroad	AQ040
		3	Railroad	AQ040
		4	Road	AQ040
ubc	Underbridge Clearance Category (decimeters)			
		-32768	Null	AQ040 tuc=3
		0	Unknown	AQ040 tuc<>3
		> 0		AQ040 tuc<>3
wd1	Minimum Traveled Way Width (decimeters)			
		-32768	Null	AQ040 tuc=3
		0	Unknown	AQ040 tuc<>3
		> 0		AQ040 tuc<>3

TABLE E-240. Bridge Line Feature Table (Continued).

wt2	Width of Second Traveled Way (decimeters)			
		-32768	Null	AQ040 tuc=3
		0	Unknown	AQ040 tuc<>3
		> 0		AQ040 tuc<>3

TABLE E-241. Ferry Crossing Line Join Table.

(This table is used to combine linear transportation features with their associated edge primitives in a one-to-many relationship.)

```
{Header length}L;
Ferry Crossing Line Join Table;-;
id=I,1,P,Row Identifier,-,-,-,:
ferryl.lft_id=I,1,N,Feature Key,-,ferryl.jti,-,:
tile_id=S,1,N,Tile Reference ID,-,tile2_id.jti,-,:
edg_id=I,1,N,Edge Primitive ID,-,edg2_id.jti,-,:;
```

TABLE E-242. Ferry Crossing Line Feature Table.

Thematic Layer:	Transportation
Coverage Name:	trans
Feature Table Description:	Ferry Crossing Line Feature Table
Table Name:	ferryl.lft
DQ Layer Number:	11
Portrayal Criteria:	For AQ070 length >=25 meters.

```
{Header length}L;
Ferry Crossing Line Feature Table;-;
id=I,1,P,Row Identifier,-,-,-,:
f_code=T,5,N,FACC Feature Code,char.vdt,-,-,:
exs=S,1,N,Existence Category,int.vdt,-,-,:
fcl=S,1,N,Ferry Crossing Length (meters),int.vdt,-,-,:
tuc=S,1,N,Transportation Use Category,int.vdt,-,-,:;
```

Column	**Description**	**Value**	**Value Meaning**	**Applicable f_code for Each Attribute Value**
id	Row Identifier	Sequential beginning with 1		
f_code	FACC Feature Code			
		AQ070	Ferry Crossing	
exs	Existence Category (value added)			
		0	Unknown (default)	AQ070
		5	Under Construction	AQ070
		6	Abandoned/Disused	AQ070
		7	Destroyed	AQ070
		28	Operational	AQ070
		601	Damaged	AQ070

TABLE E-242. Ferry Crossing Line Feature Table (Continued).

fcl	Ferry Crossing Length (meters)			
		0	Unknown	AQ070
		>=25		AQ070
tuc	Transportation Use Category			
		0	Unknown	AQ070
		1	Both Road and Railroad	AQ070
		3	Railroad	AQ070
		4	Road	AQ070

TABLE E-243. Ford Line Join Table.

(This table is used to combine linear transportation features with their associated edge primitives in a one-to-many relationship.)

```
{Header length}L;
Ford Line Join Table;-;
id=I,1,P,Row Identifier,-,-,-,:
fordl.lft_id=I,1,N,Feature Key,-,fordl.jti,-,:
tile_id=S,1,N,Tile Reference ID,-,tile3_id.jti,-,:
edg_id=I,1,N,Edge Primitive ID,-,edg3_id.jti,-,:;
```

TABLE E-244. Ford Line Feature Table.

Thematic Layer: Transportation
Coverage Name: trans
Feature Table Description: Ford Line Feature Table
Table Name: fordl.lft
DQ Layer Number: 11
Portrayal Criteria: For BH070 Length >= 25 meters and asociated with delineated transportation feature.

```
{Header length}L;
Ford Line Feature Table;-;
id=I,1,P,Row Identifier,-,-,-,:
f_code=T,5,N,FACC Feature Code,char.vdt,-,-,:;
```

Column	**Description**	**Value**	**Value Meaning**	**Applicable f_code for Each Attribute Value**
id	Row Identifier	Sequential beginning with 1		
f_code	FACC Feature Code			
		BH070	Ford	

TABLE E-245. Harbor Line Join Table.

(This table is used to combine linear transportation features with their associated edge primitives in a one-to-many relationship.)

```
{Header length}L;
Harbor Line Join Table;-;
id=I,1,P,Row Identifier,-,-,-,:
harborl.lft_id=I,1,N,Feature Key,-,harborl.jti,-,:
tile_id=S,1,N,Tile Reference ID,-,tile4_id.jti,-,:
edg_id=I,1,N,Edge Primitive ID,-,edg4_id.jti,-,:;
```

TABLE E-246. Harbor Line Feature Table.

Thematic Layer: Transportation
Coverage Name: trans
Feature Table Description: Harbor Line Feature Table
Table Name: harborl.lft
DQ Layer Number: 11
Portrayal Criteria: For BB190 width < 20 meters and length >= 100 meters, and for BB220 width < 20 meters and length >= 50 meters.

```
{Header length}L;
Harbor Line Feature Table;-;
id=I,1,P,Row Identifier,-,-,-,:
f_code=T,5,N,FACC Feature Code,char.vdt,f_code4.lti,-,:
len=S,1,N,Length/Diameter (meters),int.vdt,-,-,:
wid=S,1,N,Width (meters),int.vdt,-,-,:
vrr=S,1,N,Vertical Reference Category,int.vdt,-,-,:;
```

Column	Description	Value	Value Meaning	Applicable f_code for Each Attribute Value
id	Row Identifier	Sequential beginning with 1		
f_code	FACC Feature Code			
		BB190	Pier/Wharf/Quay	
		BB220	Ramp(Maritime)	
len	Length/Diameter (meters)			
		0	Unknown	BB190
		>= 100		BB190
		>= 50		BB220
wid	Width (meters)			
		0	Unknown	BB190,BB220
		< 20		BB190,BB220
vrr	Vertical Reference Category			
		-32768	Null	BB190
		0	Unknown	BB220
		1	Above Surface/Does not cover (At High Water)	BB220

TABLE E247. Lift Line Join Table.

(This table is used to combine linear transportation features with their associated edge primitives in a one-to-many relationship.)

```
{Header length}L;
Lift Line Join Table;-;
id=I,1,P,Row Identifier,-,-,-,:
liftl.lft_id=I,1,N,Feature Key,-,liftl.jti,-,:
tile_id=S,1,N,Tile Reference ID,-,tile5_id.jti,-,:
edg_id=I,1,N,Edge Primitive ID,-,edg5_id.jti,-,:;
```

TABLE E-248. Lift Line Feature Table.

Thematic Layer:	Transportation
Coverage Name:	trans
Feature Table Description:	Lift Line Feature Table
Table Name:	liftl.lft
DQ Layer Number:	11
Portrayal Criteria:	For AQ010 length >=375 meters or landmark.

```
{Header length}L;
Lift Line Feature Table;-;
id=I,1,P,Row Identifier,-,-,-,:
f_code=T,5,N,FACC Feature Code,char.vdt,-,-,:
use=S,1,N,Usage,int.vdt,-,-,:
yht=S,1,N,Height Range with Greater Precision,int.vdt,-,-,:;
```

Column	Description	Value	Value Meaning	Applicable f_code for Each Attribute Value
id	Row Identifier	Sequential beginning with 1		
f_code	FACC Feature Code			
		AQ010	Aerial Cableway Lines/Ski Lift Lines	
use	Usage			
		0	Unknown	AQ010
		120	Recreational	AQ010
		130	Transportation	AQ010
		999	Other	AQ010
yht	Height Range with Greater Precision (value added)			
		0	Unknown	AQ010
		1	<= 0.5	AQ010
		2	> 0.5 and <= 1.0	AQ010
		3	> 1.0 and <= 1.5	AQ010
		4	> 1.5 and <= 2.0	AQ010
		5	> 2.0 and <= 5.0	AQ010
		6	> 5.0 and <= 10.0	AQ010
		7	> 10.0 and <= 20.0	AQ010
		8	> 20.0 and <= 35.0	AQ010
		9	> 35.0	AQ010

TABLE E-249. Railroad Related Join Table.

(This table is used to combine transportation line features with their associated related attribute table containing the name of the railroad. This association will be used only for name of railroads as captured under the feature code AN010 railroad track.)

```
{Header length}L;
Railroad Related Join Table;-;
id=I,1,P,Row Identifier,-,-,-,:
railrdl.lft_id=I,1,N,Feature Key,-,railrat1.jti,-,:
rat_id=I,1,N,Row identifier for the notes related attribute table,
  -,railrat2.jti,-,:;
```

TABLE E-250. Railroad Related Attribute Table.

(This table is used to store the name as text for major railroads. This replaces the name attribute and adds flexibility to the data set. If multiple names exist over the same segment of the railroad, each name will be represented as a separate entry in the related attribute table. Multiple names will be related through the related join table as the same feat_id but different rat_id containing each name. All alphabetic characters will be in uppercase and will contain complete names avoiding the use of abbreviations.)

```
{Header length}L;
Railroad Related Attribute Table;-;
id=I,1,P,Row Identifier,-,-,-,:
text=T,*,N,Text for railroad names,-,-,-,:;
```

TABLE E-251. Railroad Line Join Table.

(This table is used to combine linear transportation features with their associated edge primitives in a one-to-many relationship.)

```
{Header length}L;
Railroad Line Join Table;-;
id=I,1,P,Row Identifier,-,-,-,:
railrdl.lft_id=I,1,N,Feature Key,-,railrdl.jti,-,:
tile_id=S,1,N,Tile Reference ID,-,tile6_id.jti,-,:
edg_id=I,1,N,Edge Primitive ID,-,edg6_id.jti,-,:;
```

TABLE E-252. Railroad Line Feature Table.

Thematic Layer: Transportation
Coverage Name: trans
Feature Table Description: Railroad Line Feature Table
Table Name: railrdl.lft
DQ Layer Number: 11
Portrayal Criteria: For AN010 with rrc 15 (inclined tramway) length >= 375 meters or landmark, AN050 length >= 280 meters.

```
{Header length}L;
Railroad Line Feature Table;-;
id=I,1,P,Row Identifier,-,-,-,:
f_code=T,5,N,FACC Feature Code,char.vdt,f_code6.lti,-,:
ctl=S,1,N,Cumulative Track Length (meters),int.vdt,-,-,:
exs=S,1,N,Existence Category,int.vdt,-,-,:
loc=S,1,N,Location Category,int.vdt,-,-,:
ltn=S,1,N,Track/Lane Number,int.vdt,-,-,:
rgc=S,1,N,Railroad Gauge Category,int.vdt,-,-,:
rra=S,1,N,Railroad Power Source,int.vdt,-,-,:
rrc=S,1,N,Railroad Categories,int.vdt,-,-,:
rsa=S,1,N,Railroad Siding/Spur Attribute,int.vdt,-,-,:
sgc=S,1,N,Gradient/Slope (percent),int.vdt,-,-,:;
```

Column	Description	Value	Value Meaning	Applicable f_code for Each Attribute Value
id	Row Identifier	Sequential beginning with 1		
f_code	FACC Feature Code			
		AN010	Railroad	
		AN050	Railroad Siding/Railroad Spur	
ctl	Cumulative Track Length (meters)			
		-32768	Null	AN010
		0	Unknown	AN050
		>= 280		AN050
exs	Existence Category			
		0	Unknown	AN010,AN050
		5	Under Construction	AN010,AN050
		6	Abandoned/Disused	AN010,AN050
		7	Destroyed (value added)	AN010,AN050
		8	Dismantled	AN010,AN050
		28	Operational	AN010,AN050
loc	Location Category			
		-32768	Null	AN050
		0	Unknown	AN010
		8	On Ground Surface	AN010
		25	Suspended/Elevated above Ground or Water Surface	AN010

TABLE E-252. Railroad Line Feature Table (Continued).

ltn	Track/Lane Number			
		-32768	Null	AN050
		0	Unknown	AN010
		>0		AN010
rgc	Railroad Gauge Category			
		0	Unknown	AN010,AN050
		1	Broad Gauge	AN010,AN050
		2	Narrow/Narrow Gauge	AN010,AN050
		3	Normal (Standard) Gauge	AN010,AN050
rra	Railroad Power Source			
		0	Unknown	AN010,AN050
		1	Electrified Track	AN010,AN050
		3	Overhead Electrified	AN010,AN050
		4	Non-Electrified	AN010,AN050
rrc	Railroad Categories			
		-32768	Null	AN050
		0	Unknown (default)	AN010
		15	Inclined Railway	AN010
rsa	Railroad Siding/Spur Attribute			
		-32768	Null	AN010
		0	Unknown	AN050
		1	Spur	AN050
		2	Siding	AN050
		3	Passing	AN050
sgc	Gradient/Slope (percent)			
		-32768	Null	AN050
		999	Unknown (default)	AN010
		>= 3		AN010

For AN010 Gauge Width (GAW) if known, will describe the width of railroads for a particular country or region in the transportation text feature, if it is known.

TABLE E-253. Road Related Join Table.

(This table is used to combine transportation line features with their associated related attribute table containing the name of the road. This association will only be implemented for feature code AP030 roads.)

```
{Header length}L;
Road Related Join Table;-;
id=I,1,P,Row Identifier,-,-,-,:
roadl.lft_id=I,1,N,Feature Key,-,roadrat1.jti,-,:
rat_id=I,1,N,Row identifier for the related attribute table,-,roadrat2.jti,
  -,:;
```

TABLE E-254. Road Related Attribute Table.

(This table is used to store the major route numbers and names as text for major roads. This replaces the name attribute and adds flexibility to the data set. If multiple route numbers exist over the same segment of the road, each route number and associated name will be represented a separate entry in the roads.rat table. In such cases the same feat_id is contained in the related join table, but different rat_id will contain each route number and its associated name.

The route numbers will take precedence over road names. The precedence of route numbers will be international, national, and state/provincial or equivalent. All alphabetic characters will be in upper case for national and state names. Complete names will be used, abbreviations will be avoided. Route name will include the country name code, which will use FIPS 10-3 country code for the country name. This will take precedence over route number. The hyphen '-' will be used as a delimiter between country code and route number. The plus '+' will be used as a delimeter between route number and road name. Blanks will not be used to separate international and national numbers and characters in the route number, however they are permitted in the road name. For example, US-I495+CAPITAL BELTWAY is a valid entry, US-I-70 or US-I 70 is not valid.)

```
{Header length}L;
Road Related Attribute Table;-;
id=I,1,P,Row Identifier,-,-,-,:
text=T,*,N,Text information on road numbers and names,-,-,-,:;
```

TABLE E-255. Road Line Join Table.

(This table is used to combine linear transportation features with their associated edge primitives in a one-to-many relationship.)

```
{Header length}L;
Road Line Join Table;-;
id=I,1,P,Row Identifier,-,-,-,:
roadl.lft_id=I,1,N,Feature Key,-,roadl.jti,-,:
tile_id=S,1,N,Tile Reference ID,-,tile7_id.jti,-,:
edg_id=I,1,N,Edge Primitive ID,-,edg7_id.jti,-,:;
```

TABLE E-256. Road Line Feature Table.

Thematic Layer: Transportation
Coverage Name: trans
Feature Table Description: Road Line Feature Table
Table Name: roadl.lft
DQ Layer Number: 11
Portrayal Criteria: For AP030 if 'med = 1 with median' (divided highway) each travelway will be collected as separate feature. Generally all roads must be greater than or equal to 300 meters in length unless associated or connected with a portrayed feature or facility. The road may then be portrayed if it is significant to the transportation network. (For example a AWHS road passes next to a substation with a shorter road segment entering the facility. The road may be portrayed if no other roads exist or this road connects to another road on the other side of the facility- judgment of the cartographer/analyst.) In built-up areas only a representative pattern of roads will be collected, with through routes and major roads having precedence. Steep grades will be portrayed as part of the road if greater than or equal to seven percent and length greater than or equal to 300 meters using the SGC attribute. Shorter segments (length <300 m) will be captured as a node feature. AP020 features will be represented only on portrayed all weather hard surface roads.

```
{Header length}L;
Road Line Feature Table;-;
id=I,1,P,Row Identifier,-,-,-,:
f_code=T,5,N,FACC Feature Code,char.vdt,f_code7.lti,-,:
acc=S,1,N,Accuracy Category,int.vdt,-,-,:
exs=S,1,N,Existence Category,int.vdt,-,-,:
loc=S,1,N,Location Category,int.vdt,-,-,:
med=S,1,N,Median Category,int.vdt,-,-,:
rst=S,1,N,Road/Runway Surface Type,int.vdt,-,-,:
sgc=S,1,N,Gradient/Slope (percent),int.vdt,-,-,:
wd1=S,1,N,Minimum Traveled Way Width (decimeters),int.vdt,-,-,:
wtc=S,1,N,Weather Type Category,int.vdt,-,-,:;
```

TABLE E-256. Road Line Feature Table (Continued).

Column	Description	Value	Value Meaning	Applicable f_code for Each Attribute Value
id	Row Identifier	Sequential beginning with 1		
f_code	FACC Feature Code			
		AP020	Interchange	
		AP030	Road	
acc	Accuracy Category			
		-32768	Null	AP020
		0	Unknown	AP030
		1	Accurate	AP030
		2	Approximate	AP030
exs	Existence Category			
		0	Unknown	AP020,AP030
		5	Under Construction	AP020,AP030
		28	Operational	AP020,AP030
loc	Location Category			
		0	Unknown	AP020,AP030
		8	On Ground Surface	AP020,AP030
		25	Suspended/Elevated above Ground or Water Surface	AP020,AP030
med	Median Category			
		-32768	Null	AP020
		0	Unknown	AP030
		1	With Median	AP030
		2	Without Median	AP030
rst	Road/Runway Surface Type			
		0	Unknown	AP020,AP030
		1	Hard/Paved	AP020,AP030
		2	Loose/Unpaved	AP030
sgc	Gradient/Slope (percent)			
		999	Unknown	AP020,AP030
		>= 7		AP020,AP030
wd1	Minimum Traveled Way Width (decimeters)			
		0	Unknown	AP020,AP030
		>= 25		AP020,AP030
wtc	Weather Type Category			
		0	Unknown	AP020,AP030
		1	All Weather	AP020,AP030
		2	Fair/Dry Weather	AP030

TABLE E-257. Track Line Join Table.

(This table is used to combine linear transportation features with their associated edge primitives in a one-to-many relationship.)

```
{Header length}L;
Track Line Join Table;-;
id=I,1,P,Row Identifier,-,-,-,:
trackl.lft_id=I,1,N,Feature Key,-,trackl.jti,-,:
tile_id=S,1,N,Tile Reference ID,-,tile8_id.jti,-,:
edg_id=I,1,N,Edge Primitive ID,-,edg8_id.jti,-,:;
```

TABLE E-258. Track Line Feature Table.

Thematic Layer: Transportation
Coverage Name: trans
Feature Table Description: Track Line Feature Table
Table Name: trackl.lft
DQ Layer Number: 11
Portrayal Criteria: Only prominent features will be shown with greater density occurring where existing road network is less prominent.

```
{Header length}L;
Track Line Feature Table;-;
id=I,1,P,Row Identifier,-,-,-,:
f_code=T,5,N,FACC Feature Code,char.vdt,-,-,:
acc=S,1,N,Accuracy Category,int.vdt,-,-,:
wd1=S,1,N,Minimum Traveled Way Width (decimeters),int.vdt,-,-,:
wtc=S,1,N,Weather Type Category,int.vdt,-,-,:;
```

Column	Description	Value	Value Meaning	Applicable f_code for Each Attribute Value
id	Row Identifier	Sequential beginning with 1		
f_code	FACC Feature Code			
		AP010	Cart Track	
acc	Accuracy Category			
		0	Unknown	AP010
		1	Accurate	AP010
		2	Approximate	AP010
wd1	Minimum Traveled Way Width (decimeters) [Value added]			
		0	Unknown [default]	AP010
		>= 18		AP010
wtc	Weather Type Category			
		0	Unknown	AP010
		2	Fair/Dry Weather	AP010
		3	Winter Only	AP010

TABLE E-259. Trail Line Join Table.

(This table is used to combine linear transportation features with their associated edge primitives in a one-to-many relationship.)

```
{Header length}L;
Trail Line Join Table;-;
id=I,1,P,Row Identifier,-,-,-,:
traill.lft_id=I,1,N,Feature Key,-,traill.jti,-,:
tile_id=S,1,N,Tile Reference ID,-,tile9_id.jti,-,:
edg_id=I,1,N,Edge Primitive ID,-,edg9_id.jti,-,:;
```

TABLE E-260. Trail Line Feature Table.

Thematic Layer: Transportation
Coverage Name: trans
Feature Table Description: Trail Line Feature Table
Table Name: traill.lft
DQ Layer Number: 11
Portayal Criteria: Only landmark features will be shown and width < 1.8 meters.

```
{Header length}L;
Trail Line Feature Table;-;
id=I,1,P,Row Identifier,-,-,-,:
f_code=T,5,N,FACC Feature Code,char.vdt,-,-,:
wtc=S,1,N,Weather Type Category,int.vdt,-,-,:;
```

Column	**Description**	**Value**	**Value Meaning**	**Applicable f_code for Each Attribute Value**
id	Row Identifier	Sequential beginning with 1		
f_code	FACC Feature Code			
		AP050	Trail	
wtc	Weather Type Category			
		0	Unknown	AP050
		2	Fair/Dry Weather	AP050

TABLE E-261. Tunnel Line Join Table.

(This table is used to combine linear transportation features with their associated edge primitives in a one-to-many relationship.)

```
{Header length}L;
Tunnel Line Join Table;-;
id=I,1,P,Row Identifier,-,-,-,:
tunnell.lft_id=I,1,N,Feature Key,-,tunnell.jti,-,:
tile_id=S,1,N,Tile Reference ID,-,til10_id.jti,-,:
edg_id=I,1,N,Edge Primitive ID,-,edg10_id.jti,-,:;
```

TABLE E-262. Tunnel Line Feature Table.

Thematic Layer: Transportation
Coverage Name: trans
Feature Table Description: Tunnel Line Feature Table
Table Name: tunnell.lft
DQ Layer Number: 11
Portrayal Criteria: For AL075 and AQ130 length >= 75 meters, for AL210 length >= 40 meters, and with AL155 must be associated with portrayed road or railroad.

```
{Header length}L;
Tunnel Line Feature Table;-;
id=I,1,P,Row Identifier,-,-,-,:
f_code=T,5,N,FACC Feature Code,char.vdt,f_code10.lti,-,:
exs=S,1,N,Existence Category,int.vdt,-,-,:
hca=S,1,N,Horizontal Clearance Attribute (decimeters),int.vdt,-,-,:
len=S,1,N,Length/Diameter (meters),int.vdt,-,-,:
nam=T,*,N,Name,char.vdt,-,-,:
ohc=S,1,N,Overhead Clearance Category (decimeters),int.vdt,-,-,:
tuc=S,1,N,Transportation Use Category,int.vdt,-,-,:
use=S,1,N,Usage,int.vdt,-,-,:;
```

Column	Description	Value	Value Meaning	Applicable f_code for Each Attribute Value
id	Row Identifier	Sequential beginning with 1		
f_code	FACC Feature Code			
		AL075	Gallery	
		AL155	Overhead Obstruction Location	
		AL210	Snow Shed/Rock Shed	
		AQ130	Tunnel	
exs	Existence Category			
		-32768	Null	AL155
		0	Unknown	AL075,AL210,AQ130
		5	Under Construction	AL075,AL210,AQ130
		28	Operational	AL075,AL210,AQ130

TABLE E-262. Tunnel Line Feature Table (Continued).

hca	Horizontal Clearance Attribute (decimeters)			
		0	Unknown	AL075,AL155, AL210,AQ130
		>0		AL075,AL155, AL210,AQ130
len	Length/Diameter (meters)			
		-32768	Null	AL155
		0	Unknown	AL075,AL210,AQ130
		>= 75		AL075,AQ130
		>= 40		AL210
nam	Name			
	Variable length text=			
		zero-length	Null	AL075,AL155,AL210
		Character Text	String	AQ130
		UNK (No entry present)		AQ130
ohc	Overhead Clearance Category (decimeters)			
		0	Unknown	AL075,AL155, AL210,AQ130
		>0		AL075,AL155, AL210,AQ130
tuc	Transportation Use Category			
		0	Unknown	AL075,AL155, AL210,AQ130
		1	Both Road and Railroad	AQ130,AL075, AL155,AL210
		3	Railroad	AQ130,AL075, AL155,AL210
		4	Road	AQ130,AL075, AL155,AL210
use	Usage			
		-32768	Null	AL075,AL155,AQ130
		0	Unknown	AL210
		115	Snow Shed	AL210
		116	Rock Shed	AL210

TABLE E-263. Aircraft Facility Area Join Table.

(This table is used to combine transportation area features with their associated face primitives in a one-to-many relationship.)

```
{Header length}L;
Aircraft Facility Area Join Table;-;
id=I,1,P,Row Identifier,-,-,-,:
aerofaca.aft_id=I,1,N,Feature Key,-,aerofaca.jti,-,:
tile_id=S,1,N,Tile Reference ID,-,til11_id.jti,-,:
fac_id=I,1,N,Face Primitive ID,-,fac11_id.jti,-,:;
```

TABLE 264. Aircraft Facility Area Feature Table.

Thematic Layer: Transportation
Coverage Name: trans
Feature Table Description: Aircraft Facility Area Feature Table
Table Name: aerofaca.aft
DQ Layer Number: 11

```
{Header length}L;
Aircraft Facility Area Feature Table;-;
id=I,1,P,Row Identifier,-,-,-,:
f_code=T,5,N,FACC Feature Code,char.vdt,-,-,:
apt=S,1,N,Airfield Type,int.vdt,-,-,:
cod=S,1,N,Certainty of Delineation,int.vdt,-,-,:
exs=S,1,N,Existence Category,int.vdt,-,-,:
nam=T,*,N,Name,char.vdt,-,-,:
use=S,1,N,Usage,int.vdt,-,-,:;
```

Column	Description	Value	Value Meaning	Applicable f_code for Each Attribute Value
id	Row Identifier	Sequential beginning with 1		
f_code	FACC Feature Code			
		GB005	Airport/Airfield	
apt	Airfield Type			
		0	Unknown	GB005
		4	Seaplane Base	GB005
		9	Heliport	GB005
		14	Airport/Airfield	GB005
cod	Certainty of Delineation			
		1	Limits and Information Known	GB005
		2	Limits and Information Unknown	GB005

TABLE 264. Aircraft Facility Area Feature Table (Continued).

exs	Existence Category (some value added)			
		0	Unknown	GB005
		6	Abandoned/Disused	GB005
		28	Operational	GB005
		5	Under Construction (v/a)	GB005
		7	Destroyed (v/a)	GB005
		601	Damaged (v/a)	GB005
nam	Name			
		Character text string		GB005
		UNK (No entry present)		GB005
use	Usage			
		0	Unknown	GB005
		8	Military	GB005
		22	Joint Military/Civilian	GB005
		23	International	GB005
		49	Civilian/Public	GB005

TABLE E-265. Harbor Area Join Table.

(This table is used to combine transportation area features with their associated face primitives in a one-to-many relationship.)

```
{Header length}L;
Harbor Area Join Table;-;
id=I,1,P,Row Identifier,-,-,-,:
harbora.aft_id=I,1,N,Feature Key,-,harbora.jti,-,:
tile_id=S,1,N,Tile Reference ID,-,til12_id.jti,-,:
fac_id=I,1,N,Face Primitive ID,-,fac12_id.jti,-,:;
```

TABLE E-266. Harbor Area Feature Table.

Thematic Layer: Transportation
Coverage Name: trans
Feature Table Description: Harbor Area Feature Table
Table Name: harbora.aft
DQ Layer Number: 11
Portrayal Criteria: For BB010 area >= 15,625 square meters, For BB190 width >= 20 meters and length >= 100 meters, and for BB220 width >= 20 meters and length >= 50 meters, and BB090 width >= 20 meters or landmark.

```
{Header length}L;
Harbor Area Feature Table;-;
id=I,1,P,Row Identifier,-,-,-,:
f_code=T,5,N,FACC Feature Code,char.vdt,f_code12.ati,-,:
len=S,1,N,Length/Diameter (meters),int.vdt,-,-,:
loc=S,1,N,Location Category,int.vdt,-,-,:
mac=S,1,N,Maritime Area Category,int.vdt,-,-,:
vrr=S,1,N,Vertical Reference Category,int.vdt,-,-,:
wid=S,1,N,Width (meters),int.vdt,-,-,:;
```

Column	Description	Value	Value Meaning	Applicable f_code for Each Attribute Value
id	Row Identifier	Sequential beginning with 1		
f_code	FACC Feature Code			
		BB010	Anchorage	
		BB090	Drydock	
		BB190	Pier/Wharf/Quay	
		BB220	Ramp(Maritime)	
len	Length/Diameter (meters)			
		-32768	Null	BB010,BB090
		0	Unknown	BB220
		>= 50		BB220
		>= 100		BB190

TABLE E-266. Harbor Area Feature Table (Continued).

loc	Location Category			
		-32768	Null	BB010,BB190,BB220
		0	Unknown	BB090
		15	On Water Surface/ Floating	BB090
		30	Non-Floating	BB090
mac	Maritime Area Category			
		-32768	Null	BB090,BB190,BB220
		0	Unknown	BB010
		53	Seaplane Anchorage	BB010
vrr	Vertical Reference Category			
		-32768	Null	BB010,BB090,BB190
		0	Unknown	BB220
		1	Above Surface/Does not cover (At High Water)	BB220
wid	Width (meters)			
		-32768	Null	BB010
		0	Unknown	BB090,BB190
		> 0		BB090
		>= 20		BB190,BB220

TABLE E-267. Rest Area Join Table.

(This table is used to combine transportation area features with their associated face primitives in a one-to-many relationship.)

```
{Header length}L;
Rest Area Join Table;-;
id=I,1,P,Row Identifier,-,-,-,:
resta.aft_id=I,1,N,Feature Key,-,resta.jti,-,:
tile_id=S,1,N,Tile Reference ID,-,til13_id.jti,-,:
fac_id=I,1,N,Face Primitive ID,-,fac13_id.jti,-,:;
```

TABLE E-268. Rest Area Feature Table.

Thematic Layer: Transportation
Coverage Name: trans
Feature Table Description: Rest Area Feature Table
Table Name: resta.aft
DQ Layer Number: 11
Portrayal Criteria: For AQ135 width must be >= 125 meters and be landmark feature.

```
{Header length}L;
Rest Area Feature Table;-;
id=I,1,P,Row Identifier,-,-,-,:
f_code=T,5,N,FACC Feature Code,char.vdt,-,-,:
wid=S,1,N,Width (meters),int.vdt,-,-,:;
```

Column	Description	Value	Value Meaning	Applicable f_code for Each Attribute Value
id	Row Identifier	Sequential beginning with 1		
f_code	FACC Feature Code			
		AQ135	Vehicle Stopping Area/Rest Area	
wid	Width (meters)			
		0	Unknown	AQ135
		>=125		AQ135

TABLE E-269. Railroad Yard Area Join Table.

(This table is used to combine transportation area features with their associated face primitives in a one-to-many relationship.)

```
{Header length}L;
Railroad Yard Area Join Table;-;
id=I,1,P,Row Identifier,-,-,-,:
rryarda.aft_id=I,1,N,Feature Key,-,rryarda.jti,-,:
tile_id=S,1,N,Tile Reference ID,-,til14_id.jti,-,:
fac_id=I,1,N,Face Primitive ID,-,fac14_id.jti,-,:;
```

TABLE E-270. Railroad Yard Area Feature Table.

Thematic Layer: Transportation
Coverage Name: trans
Feature Table Description: Railroad Yard Area Feature Table
Table Name: rryarda.aft
DQ Layer Number: 11
Portrayal Criteria: For AN060, the number of tracks should be 3 or greater as a general rule.

```
{Header length}L;
Railroad Yard Area Feature Table;-;
id=I,1,P,Row Identifier,-,-,-,:
f_code=T,5,N,FACC Feature Code,char.vdt,-,-,:
ctl=S,1,N,Cumulative Track Length (meters),int.vdt,-,-,:
exs=S,1,N,Existence Category,int.vdt,-,-,:;
```

Column	Description	Value	Value Meaning	Applicable f_code for Each Attribute Value
id	Row Identifier	Sequential beginning with 1		
f_code	FACC Feature Code			
		AN060	Railroad Yard/Marshalling Yard	
ctl	Cumulative Track Length (meters)			
		0	Unknown	AN060
		>=280		AN060
exs	Existence Category			
		0	Unknown	AN060
		5	Under Construction	AN060
		6	Abandoned/Disused	AN060
		28	Operational	AN060

TABLE E-271. Runway Area Join Table.

(This table is used to combine transportation area features with their associated face primitives in a one-to-many relationship.)

```
{Header length}L;
Runway Area Join Table;-;
id=I,1,P,Row Identifier,-,-,-,:
runwaya.aft_id=I,1,N,Feature Key,-,runwaya.jti,-,:
tile_id=S,1,N,Tile Reference ID,-,til15_id.jti,-,:
fac_id=I,1,N,Face Primitive ID,-,fac15_id.jti,-,:;
```

TABLE E-272. Runway Area Feature Table.

Thematic Layer: Transportation
Coverage Name: trans
Feature Table Description: Runway Area Feature Table
Table Name: runwaya.aft
DQ Layer Number: 11
Portrayal Criteria: For GB015 width >= 20 meters, and GB055 width >= 10 meters.

```
{Header length}L;
Runway Area Feature Table;-;
id=I,1,P,Row Identifier,-,-,-,:
f_code=T,5,N,FACC Feature Code,char.vdt,f_code15.ati,-,:
exs=S,1,N,Existence Category,int.vdt,-,-,:
len=S,1,N,Length/Diameter (meters),int.vdt,-,-,:
rst=S,1,N,Road/Runway Surface Type,int.vdt,-,-,:
wid=S,1,N,Width (meters),int.vdt,-,-,:
zv3=S,1,N,Airfield/Aerodrome Elevation (meters),int.vdt,-,-,:;
```

Column	**Description**	**Value**	**Value Meaning**	**Applicable f_code for Each Attribute Value**
id	Row Identifier	Sequential beginning with 1		
f_code	FACC Feature Code			
		GB015	Apron/Hardstand	
		GB045	Overrun/Stopway	
		GB055	Runway	
		GB075	Taxiway	
exs	Existence Category			
		-32768	Null	GB015,GB045,GB075
		0	Unknown	GB055
		5	Under Construction	GB055
		6	Abandoned/Disused	GB055
		7	Destroyed	GB055
		27	Closed/Locked	GB055
		28	Operational	GB055
		59	Not Usable	GB055

TABLE E-272. Runway Area Feature Table (Continued).

len	Length/Diameter (meters)			
		-32768	Null	GB015,GB045,GB075
		0	Unknown	GB055
		>0		GB055
rst	Road/Runway Surface Type			
		-32768	Null	GB015,GB045,GB075
		0	Unknown	GB055
		6	Natural	GB055
		7	Permanent	GB055
		8	Temporary	GB055
wid	Width (meters)			
		-32768	Null	GB045,GB075
		0	Unknown	GB015,GB055
		>=10		GB055
		>=20		GB015
zv3	Airfield/Aerodrome Elevation (meters)			
		-32768	Null	GB015,GB045,GB075
		29999	Unknown	GB055
		-400 to 11999		GB055

TABLE E-273. Vehicle Storage Area Join Table.

(This table is used to combine transportation area features with their associated face primitives in a one-to-many relationship.)

```
{Header length}L;
Vehicle Storage Area Join Table;-;
id=I,1,P,Row Identifier,-,-,-,:
storveha.aft_id=I,1,N,Feature Key,-,storveha.jti,-,:
tile_id=S,1,N,Tile Reference ID,-,til16_id.jti,-,:
fac_id=I,1,N,Face Primitive ID,-,fac16_id.jti,-,:;
```

TABLE E-274. Vehicle Storage Area Feature Table.

Thematic Layer: Transportation
Coverage Name: trans
Feature Table Description: Vehicle Storage Area Feature Table
Table Name: storveha.aft
DQ Layer Number: 11
Portrayal Criteria: For AQ140 area >= 15,625 square meters and landmark feature.

```
{Header length}L;
Vehicle Storage Area Feature Table;-;
id=I,1,P,Row Identifier,-,-,-,:
f_code=T,5,N,FACC Feature Code,char.vdt,-,-,:
tuc=S,1,N,Transportation Use Category,int.vdt,-,-,:;
```

Column	Description	Value	Value Meaning	Applicable f_code for Each Attribute Value
id	Row Identifier	Sequential beginning with 1		
f_code	FACC Feature Code			
		AQ140	Vehicle Storage/Parking Area	
tuc	Transportation Use Category			
		0	Unknown	AQ140
		22	Automotive	AQ140

TABLE E-275. Transportation Void Collection Area Join Table.
(This table is used to combine transportation area features with their associated face primitives in a one-to-many relationship.)

```
{Header length}L;
Transportation Void Collection Area Join Table;-;
id=I,1,P,Row Identifier,-,-,-,:
travoida.aft_id=I,1,N,Feature Key,-,travoida.jti,-,:
tile_id=S,1,N,Tile Reference ID,-,til17_id.jti,-,:
fac_id=I,1,N,Face Primitive ID,-,fac17_id.jti,-,:;
```

TABLE E-276. Transportation Void Collection Area Feature Table.

Thematic Layer: Transportation
Coverage Name: trans
Feature Table Description: Transportation Void Collection Area Feature Table
Table Name: travoida.aft
DQ Layer Number: 11
Portrayal Criteria: For ZD020 area >= 15,625 square meters.

```
{Header length}L;
Transportation Void Collection Area Feature Table;-;
id=I,1,P,Row Identifier,-,-,-,:
f_code=T,5,N,FACC Feature Code,char.vdt,-,-,:
vca=S,1,N,Void Collection Attribute,int.vdt,-,-,:;
```

Column	Description	Value	Value Meaning	Applicable f_code for Each Attribute Value
id	Row Identifier	Sequential beginning with 1		
f_code	FACC Feature Code			
		ZD020	Void Collection Area	
vca	Void Collection Attribute			
		0	Unknown	ZD020
		2	Area Too Rough to Collect	ZD020
		3	No Available Imagery	ZD020
		6	No Available Map Source	ZD020
		7	No Suitable Imagery	ZD020

TABLE E-277. Transportation Text Feature Table.

Thematic Layer: Transportation
Coverage Name: trans
Feature Table Description: Transportation Text Feature Table
Table Name: transtxt.tft
DQ Layer Number: 11

```
{Header length}L;
Transportation Text Feature Table;-;
id=I,1,P,Row Identifier,-,-,-,:
f_code=T,5,N,FACC Feature Code,char.vdt,f_code.tti,-,:
tile_id=S,1,N,Tile Reference ID,-,tile_id.tti,-,:
txt_id=I,1,N,Text Primitive ID,-,txt_id.tti,-,:;
```

Column	Description	Value	Value Meaning	Applicable f_code for Each Attribute Value
id	Row Identifier	Sequential beginning with 1		
f_code	FACC Feature Code			
		ZD040	Named Location	
		ZD045	Text Description	

The gauge width of railroads for a particluar country or region if known will be described in the transportation text feature class.

TABLE E-278. Transportation Feature Class Attribute Table.

Thematic Layer: Transportation
Coverage Name: trans
Table Description: Transportation Feature Class Attribute Table
Table Name: fca
DQ Layer Number: 11

```
{Header length}L;
Transportation Feature Class Attribute Table;-;
id=I,1,P,Row Identifier,-,-,-,:
fclass=T,8,U,Feature Class Name,-,-,-,:
type=T,1,N,Feature Type,char.vdt,-,-,:
descr=T,*,N,Description,-,-,-,:;
```

Column	Description	Value	Value Meaning	Applicable Feature Class for Each Attribute Value
id	Row Identifier	Sequential beginning with 1		
fclass	Feature Class Name			
		aerofacp		
		harborp		
		misaerop		
		bridgec		
		contric		
		ferryc		
		fordc		
		mtnpssc		
		rrturnc		
		steepc		
		tunnelc		
		bridgel		
		ferryl		
		fordl		
		harborl		
		liftl		
		railrdl		
		roadl		
		trackl		
		traill		
		tunnell		
		aerofaca		
		harbora		
		resta		
		rryarda		
		runwaya		
		storveha		
		travoida		
		transtxt		

TABLE E-278. Transportation Feature Class Attribute Table (Continued).

type	Feature Type			
		P	Point/Node Feature	aerofacp, harborp, misaerop, bridgec, contric, ferryc, fordc, mtnpssc, rrturnc, steepc, tunnelc
		L	Line Feature	bridgel, ferryl, fordl, harborl, liftl, railrdl, roadl, trackl, traill, tunnell
		A	Area Feature	aerofaca, harbora, resta, rryarda, runwaya, storveha, travoida
		T	Text Feature	transtxt

descr	Description		
		Airport and Airfield Facilities	aerofacp,aerofaca
		Anchorage Point Feature	harborp
		Miscellaneous Aeronautical Point feature	misaerop
		Bridge and Bridge Span node Feature	bridgec
		Constriction Node Feature	contric
		Ferry Crossing Node Feature	ferryc
		Ford Sites On-road	fordc
		Mountain Pass Node Feature	mtnpssc
		Railroad Turntable	rrturnc
		Steep Grade Node Feature	steepc
		Tunnel and Related Node Features	tunnelc
		Bridge Line Feature	bridgel
		Ferry Crossing Line Feature	ferryl
		Ford Line Features On-road	fordl
		Piers, Wharves, and Ramps	harborl, harbora
		Aerial Cableways	liftl
		Railroads and Sidings	railrdl
		Roads	roadl
		Cart Tracks	trackl
		Trails	traill
		Tunnel and Related Line Features	tunnell
		Vehicle Stopping Area	resta
		Railroad Yards	rryarda
		Runway Area	runwaya
		Vehicle Storage Areas	storveha
		Transportation Void Collection Areas	travoida
		Transportation Coverage Text	transtxt

TABLE E-279. Transportation Character Value Description Table.

Thematic Layer: Transportation
Coverage Name: trans
Feature Table Description: Transportation Character Value Description Table
Table Name: char.vdt
DQ Layer Number: 11

{Header length}L;
Transportation Character Value Description Table;-;
id=I,1,P,Row Identifier,-,-,-,:
table=T,12,N,Name of the Feature Table,-,-,-,:
attribute=T,6,N,Column Name,-,-,-,:
value=T,5,N,Unique Value of Attribute,-,-,-,:
description=T,*,N,Description of Value,-,-,-,:;

1	aerofacp.pft	f_code	GB005	Airport/Airfield
2	aerofacp.pft	f_code	GB030	Helicopter Landing Pad
3	aerofacp.pft	nam	UNK	No entry present
4	harborp.pft	f_code	BB010	Anchorage
5	misaerop.pft	f_code	AQ060	Control Tower
6	misaerop.pft	f_code	AQ110	Mooring Mast
7	misaerop.pft	f_code	GB010	Airport Lighting
8	bridgec.pft	f_code	AQ040	Bridge/Overpass/Viaduct
9	bridgec.pft	f_code	AQ045	Bridge Span
10	contric.pft	f_code	AQ058	Constriction/Expansion
11	contric.pft	f_code	AQ065	Culvert
12	contric.pft	f_code	AQ118	Sharp Curve
13	ferryc.pft	f_code	AQ070	Ferry Crossing
14	fordc.pft	f_code	BH070	Ford
15	mtnpssc.pft	f_code	DB150	Mountain Pass
16	mtnpssc.pft	nam	UNK	No entry present
17	rrturnc.pft	f_code	AN075	Railroad Turntable
18	steepc.pft	f_code	AQ120	Steep Grade
19	tunnelc.pft	f_code	AL075	Gallery
20	tunnelc.pft	f_code	AL155	Overhead Obstruction Location
21	tunnelc.pft	f_code	AL210	Snow Shed/Rock Shed
22	tunnelc.pft	f_code	AQ130	Tunnel
23	tunnelc.pft	nam	UNK	No entry present
24	bridgel.lft	f_code	AQ040	Bridge/Overpass/Viaduct
25	ferryl.lft	f_code	AQ070	Ferry Crossing
26	fordl.lft	f_code	BH070	Ford
27	harborl.lft	f_code	BB190	Pier/Wharf/Quay
28	harborl.lft	f_code	BB220	Ramp(Maritime)
29	liftl.lft	f_code	AQ010	Aerial Cableway Lines/Ski Lift Lines
30	railrdl.lft	f_code	AN010	Railroad
31	railrdl.lft	f_code	AN050	Railroad Siding/Railroad Spur
32	roadl.lft	f_code	AP020	Interchange
33	roadl.lft	f_code	AP030	Road
34	trackl.lft	f_code	AP010	Cart Track
35	traill.lft	f_code	AP050	Trail
36	tunnell.lft	f_code	AL075	Gallery
37	tunnell.lft	f_code	AL155	Overhead Obstruction Location

TABLE E-279. Transportation Character Value Description Table (Continued).

38	tunnell.lft	f_code	AL210	Snow Shed/Rock Shed
39	tunnell.lft	f_code	AQ130	Tunnel
40	tunnell.lft	nam	UNK	No entry present
41	aerofaca.aft	f_code	GB005	Airport/Airfield
42	aerofaca.aft	nam	UNK	No entry present
43	harbora.aft	f_code	BB010	Anchorage
44	harbora.aft	f_code	BB090	Drydock
45	harbora.aft	f_code	BB190	Pier/Wharf/Quay
46	harbora.aft	f_code	BB220	Ramp(Maritime)
47	resta.aft	f_code	AQ135	Vehicle Stopping Area/Rest Area
48	rryarda.aft	f_code	AN060	Railroad Yard/Marshalling Yard
49	runwaya.aft	f_code	GB015	Apron/Hardstand
50	runwaya.aft	f_code	GB045	Overrun/Stopway
51	runwaya.aft	f_code	GB055	Runway
52	runwaya.aft	f_code	GB075	Taxiway
53	storveha.aft	f_code	AQ140	Vehicle Storage/Parking Area
54	travoida.aft	f_code	ZD020	Void Collection Area
55	transtxt.tft	f_code	ZD040	Named Location
56	transtxt.tft	f_code	ZD045	Text Description
57	fca	type	A	Area Feature
58	fca	type	L	Line Feature
59	fca	type	P	Point/Node Feature
60	fca	type	T	Text Feature

E.3.13.1 Transportation coverage glossary.

AL075 Gallery (N,L) A sunken or cut passageway along a transportation route in mountainous regions constructed to protect vehicles from the elements. A series of openings on one side may be present for lights or ventilation.
EXS Existence Category (N,L) The state or condition of the feature.
HCA Horizontal Clearance Attribute (decimeters) (N,L) The distance available to pass a load that extends laterally beyond the wheels of a vehicle.
LEN Length/Diameter (meters) (N,L) A measurement of the longer of two linear axes in meters. For a square feature, measure either axis. For a round feature, measure the diameter.
OHC Overhead Clearance Category (decimeters) (N,L) The least distance between the traveled way and any obstruction vertically above it.
TUC Transportation Use Category (N,L) Identifies the primary user, function, or authority of the transportation system.

AL155 Overhead Obstruction Location (N,L) An undelineated obstruction location such as underpasses, overhead pipelines, building overhangs, and other covered traveled ways.
HCA Horizontal Clearance Attribute (decimeters) (N,L) The distance available to pass a load that extends laterally beyond the wheels of a vehicle.
OHC Overhead Clearance Category (decimeters) (N,L) The least distance between the traveled way and any obstruction vertically above it.
TUC Transportation Use Category (N,L) Identifies the primary user, function, or authority of the transportation system.

AL210 Snow Shed/Rock Shed (N,L) A shelter built to protect a section of road or railroad from snow/rock slides.
EXS Existence Category (N,L) The state or condition of the feature.
HCA Horizontal Clearance Attribute (decimeters) (N,L) The distance available to pass a load that extends laterally beyond the wheels of a vehicle.
LEN Length/Diameter (meters) (N,L) A measurement of the longer of two linear axes in meters. For a square feature, measure either axis. For a round feature, measure the diameter.
OHC Overhead Clearance Category (decimeters) (N,L) The least distance between the traveled way and any obstruction vertically above it .
TUC Transportation Use Category (N,L) Identifies the primary user, function, or authority of the transportation system.
USE Usage (N,L) Use (identifies the primary user, function, or controlling authority).

AN010 Railroad (L) A rail or set of parallel rails on which a train or tram runs.
EXS Existence Category (L) The state or condition of the feature.
LOC Location Category (L) Status of feature relative to surrounding area or water.
LTN Track/Lane Number (L) The number of track(s) or lanes of the feature, including both directions.
RGC Railroad Gauge Category (L) The type of gauge used.
RRA Railroad Power Source (L) Source of electrical power for railroad.
RRC Railroad Categories (L) The type of railroad system used to support various transportation uses.

SGC Gradient/Slope (percent) (L) Percentage of Slope (i.e. The change in height divided by the horizontal distance over which the change takes place, times one hundred ((H2-h1)/d)*100).

AN050 Railroad Siding/Railroad Spur (L) A stretch of railroad tracks connected to the main track by switch(es) - used for temporary storage and loading/unloading.
CTL Cumulative Track Length (meters) (L) Total cumulative length of track contained within confines of the feature, exclusive of the branch or main trunk lines running into and/or out of the feature.
EXS Existence Category (L) The state or condition of the feature.
RGC Railroad Gauge Category (L) The type of gauge used.
RRA Railroad Power Source (L) Source of electrical power for railroad.
RSA Railroad Siding/Spur Attribute (L) Type of connecting track.

AN060 Railroad Yard/Marshalling Yard (A) A system of tracks within defined limits, and associated features, provided for loading/unloading and assembling trains.
CTL Cumulative Track Length (meters) (A) Total cumulative length of track contained within confines of the feature, exclusive of the branch or main trunk lines running into and/or out of the feature.
EXS Existence Category (A) The state or condition of the feature.

AN075 Railroad Turntable (N) A rotating platform with railroad track used for turning locomotives or cars/carriages.

AP010 Cart Track (L) An unimproved roadway.
ACC Accuracy Category (L) Accuracy of geographic position.
WD1 Minimum Traveled Way Width (decimeters) (L) Minimum width of the traveled way, excluding hard pavements and shoulders (in decimeters).
WTC Weather Type Category (L) Weather conditions under which a Feature is usable.

AP020 Interchange (L) A connection designed to provide traffic access from one road to another.
EXS Existence Category (L) The state or condition of the feature.
LOC Location Category (L) Status of feature relative to surrounding area or water.
RST Road/Runway Surface Type (L) The physical surface composition of a road.
SGC Gradient/Slope (percent) (L) Percentage of Slope (i.e. The change in height divided by the horizontal distance over which the change takes place, times one hundred ((H2-h1)/d)*100).
WD1 Minimum Traveled Way Width (decimeters) (L) Minimum width of the traveled way, excluding hard pavements and shoulders.
WTC Weather Type Category (L) Weather conditions under which a Feature is usable.

AP030 Road (L) An open way maintained for vehicular use.
ACC Accuracy Category (L) Accuracy of geographic position.
EXS Existence Category (L) The state or condition of the feature.
LOC Location Category (L) Status of feature relative to surrounding area or water.
MED Median Category (L) Presence of a divider between multiple lanes/rails.
RST Road/Runway Surface Type (L) The physical surface composition of a road.

SGC Gradient/Slope (percent) (L) Percentage of Slope (i.e. The change in height divided by the horizontal distance over which the change takes place, times one hundred ((H2-h1)/d)*100).
WD1 Minimum Traveled Way Width (decimeters) (L) Minimum width of the traveled way, excluding hard pavements and shoulders (in decimeters).
WTC Weather Type Category (L) Weather conditions under which a Feature is usable.

AP050 Trail (L) A path worn by the passage of people or animals.
WTC Weather Type Category (L) Weather conditions under which a Feature is usable.

AQ010 Aerial Cableway Lines/Ski Lift Lines (L) Cables which are strung between elevated supports as part of a conveyor system on which cars, buckets, or other carrier units are suspended.
USE Usage (L) Use (identifies the primary user, function, or controlling authority).
YHT Height Range with Greater Precision (L) Value indicating precise range in height(meters) within delineated area of feature.

AQ040 Bridge/Overpass/Viaduct (N,L) A man-made structure spanning providing passage over a body of water, depression, or other obstacles.
BCC Bypass Condition Category (N,L) The ease or ability to circumvent a destroyed section of bridge, tunnel or pass within a 2 kilometer distance on each side of the feature. Bypass condition will not consider other bridges in bypass determination.
BOT Bridge Opening Type (N,L) The type of structure or mechanism by which a portion of a bridge is moved to allow passage of a vessel.
BSC Bridge/Bridge Superstructure Category (N,L) Structural design characteristics of the bridge or bridge segment.
EXS Existence Category (N,L) The state or condition of the feature.
HCA Horizontal Clearance Attribute (decimeters) (N,L) The distance available to pass a load that extends laterally beyond the wheels of a vehicle.
IDN Identification Number (N,L) A unique number relating specific interior map/chart features to border information.
LC1 Load Class Type 1 (N,L) Military load classification (Weight bearing capacity) for one-way traffic for wheeled vehicles.
LC2 Load Class Type 2 (N,L) Military load classification (Weight bearing capacity) for two-way traffic for wheeled vehicles.
LC3 Load Class Type 3 (N,L) Military load classification (Weight bearing capacity) for one-way traffic for tracked vehicles.
LC4 Load Class Type 4 (N,L) Military load classification (Weight bearing capacity) for two-way traffic for tracked vehicles.
LEN Length/Diameter (meters)(N,L) A measurement of the longer of two linear axes in meters. For a square feature, measure either axis. For a round feature, measure the diameter. For a bridge, the length is the distance between it abutments.
NOS Number of Spans (N,L) Number of spans. (±bridge or aqueduct)
OHC Overhead Clearance Category (decimeters) (N,L) The least distance between the traveled way and any obstruction vertically above it.
TUC Transportation Use Category (N,L) Identifies the primary user, function, or authority of the transportation system.

UBC Underbridge Clearance Category (decimeters) (N,L) Clearance below bridge, measured from the lowest surface level to the base of the lower of either a cross beam or lowest bridge deck.
WD1 Minimum Traveled Way Width (decimeters) (N,L) Minimum width of the traveled way, excluding hard pavements and shoulders (in decimeters).
WT2 Width of Second Traveled Way (decimeters)(N,L) Minimum width of a second traveled way implementing the shorter distance, excluding hard pavements and shoulders (in decimeters).

AQ045 Bridge Span (N) A section of the bridge deck between successive supports such as pillars, piers, or abutments.
IDN Identification Number (N) A unique number relating specific interior map/chart features to border information.
MCC Material Composition Category (N) Characteristics of primary material composition of feature.
YLN Length of Greater Precision (decimeters) (N) A measurement of the longer of two linear axes capable of being expressed in decimal meter units (decimeters).

AQ058 Constriction/Expansion (N) A point where a passage way narrows or expands beyond its normal width.
LEN Length/Diameter (meters) (N) A measurement of the longer of two linear axes in meters. For a square feature, measure either axis. For a round feature, measure the diameter.
TUC Transportation Use Category (N) Identifies the primary user, function, or authority of the transportation system.
WD1 Minimum Traveled Way Width (decimeters) (N) Minimum width of the traveled way, excluding hard pavements and shoulders (in decimeters).

AQ060 Control Tower (P) A tower like structure that houses the persons and equipment used to control the flow of air, rail, or marine traffic. (See also AL240)
EXS Existence Category (P) The state or condition of the feature.
HGT Height Above Surface Level (meters) (P) Distance measured from the lowest point of the base at ground or water level (downhill side/downstream side) to the tallest point of the feature.
ZV2 Highest Z-Value (meters) (P) Elevation above a given datum to the highest portion of the feature.

AQ065 Culvert (N) A sewer or drain crossing under a road, track, or embankment, without affecting the construction of the crossed feature.
WD2 Total Usable Width (decimeters) (N) Total usable width including pavements and hard shoulders (in decimeters for this feature).

AQ070 Ferry Crossing (N,L) A route in a body of water where a ferry crosses from one shoreline to another.
EXS Existence Category (N,L) The state or condition of the feature.
FCL Ferry Crossing Length (meters)(N,L) Length of crossing between shore points.
TUC Transportation Use Category (N,L) Identifies the primary user, function, or authority of the transportation system.

AQ110 Mooring Mast (P) A tower-like structure used to secure an airship.
EXS Existence Category (P) The state or condition of the feature.

HGT Height Above Surface Level (meters) (P) Distance measured from the lowest point of the base at ground or water level (downhill side/downstream side) to the tallest point of the feature.
ZV2 Highest Z-Value (meters)(P) Elevation above a given datum to the highest portion of the feature.

AQ118 Sharp Curve (N) A curve which may cause transportation restrictions.

AQ120 Steep Grade (N) Location along any given travel way where the percent (%) slope is high enough to slow, hinder, or even stop movement.
SGC Gradient/Slope (percent) (N) Percentage of Slope (i.e. The change in height divided by the horizontal distance over which the change takes place, times one hundred ((H2-h1)/d)*100).
TUC Transportation Use Category (N) Identifies the primary user, function, or authority of the transportation system.

AQ130 Tunnel (N,L) An underground or underwater passage, open at both ends, and usually containing a road or railroad.
EXS Existence Category (N,L) The state or condition of the feature.
HCA Horizontal Clearance Attribute (decimeters) (N,L) The distance available to pass a load that extends laterally beyond the wheels of a vehicle.
LEN Length/Diameter (meters) (N,L) A measurement of the longer of two linear axes in meters. For a square feature, measure either axis. For a round feature, measure the diameter.
NAM Name (N,L) Any Identifier or code.
OHC Overhead Clearance Category (decimeters) (N,L) The least distance between the traveled way and any obstruction vertically above it.
TUC Transportation Use Category (N,L) Identifies the primary user, function, or authority of the transportation system.

AQ135 Vehicle Stopping Area/Rest Area (A) A roadside place usually having facilities for people and/or vehicles.
WID Width (meters) (A) A measurement of the shorter of two linear axes. For a square feature, measure either axis. For a round feature, width shall be equal to LEN.

AQ140 Vehicle Storage/Parking Area (A) An open land area used for storing or parking vehicles or vessels. (Including Recreational Vehicles) (See also AI020 and AK060)
TUC Transportation Use Category (A) Identifies the primary user, function, or authority of the transportation system.

BB010 Anchorage (P,A) An area of water where vessels anchor or may anchor.
MAC Maritime Area Category (P,A) Area in which certain activities or factors of significance to navigation or operation apply.

BB090 Drydock (A) A structure, providing support for a vessel, which has a means of removing water so that the bottom of the vessel can be exposed.
LOC Location Category (A) Status of feature relative to surrounding area or water.
WID Width (meters) (A) A measurement of the shorter of two linerar axes. For a square feature, measure either axis. For a round feature, width shall be equal to LEN.

BB190 Pier/Wharf/Quay (L,A) A structure primarily used as berthing places for vessels.
LEN Length/Diameter (meters) (L,A) A measurement of the longer of two linear axes in meters. For a square feature, measure either axis. For a round feature, measure the diameter.
WID Width (meters)(L,A) A measurement of the shorter of two linear axes. For a square feature, measure either axis. For a round feature, width shall be equal to LEN.

BB220 Ramp(Maritime) (L,A) A partially submerged hard surfaced area on a shoreline for launching and retrieving vessels or vehicles.
LEN Length/Diameter (meters) (L,A) A measurement of the longer of two linear axes in meters. For a square feature, measure either axis. For a round feature, measure the diameter.
VRR Vertical Reference Category (L,A) Relative location referenced to sounding datum, unless otherwise indicated.
WID Width (meters) (L,A) A measurement of the shorter of two linear axes. For a square feature, measure either axis. For a round feature, width shall be equal to LEN.

BH070 Ford (N,L) A shallow place in a body of water used as a crossing.

DB150 Mountain Pass (N) A natural route through a low place in a mountain range.
NAM Name (N) Any Identifier or code.
ZV2 Highest Z-Value (meters) (N) Elevation above a given datum to the highest portion of the feature.

GB005 Airport/Airfield (P,A) A defined area of land or water used for landing, take-off, and movement of aircraft including associated buildings and facilities.
APT Airfield Type (P,A) Unique airfield type.
COD Certainty of Delineation (P,A) Indicates knowledge of the feature's limits or information.
EXS Existence Category (P,A) The state or condition of the feature.
NAM Name (P,A) Any Identifier or code.
USE Usage (P,A) Use (Identifies the primary user, function, or controlling authority).

GB010 Airport Lighting (P) Lights used to: define and outline perimeters, runways, taxiways, etc.; guide aircraft while on the ground; and to provide guidance to aircraft on approach for landing.
LFA Light Function Aeronautical (P) Type of lighting provided or type of lighting system used.

GB015 Apron/Hardstand (A) A defined paved or hard packed area at an airport or heliport intended for aircraft parking.
WID Width (meters) (A) A measurement of the shorter of two linear axes. For a square feature, measure either axis. For a round feature, width shall be equal to LEN.

GB030 Helicopter Landing Pad (P) An improved area used for take-off and landing by helicopters and other vertical take-off and landing aircraft.
APT Airfield Type (P) Unique airfield type.

NAM Name (P) Any Identifier or code.
USE Usage (P) Use (Identifies the primary user, function, or controlling authority).

GB045 Overrun/Stopway (A) An area beyond take-off runway designated as able to support an airplane during an aborted take-off.

GB055 Runway (A) A defined area, usually rectangular, used for the conventional landing and take-off of aircraft. (Excludes GB045)
EXS Existence Category (A) The state or condition of the feature.
LEN Length/Diameter (meters) (A) A measurement of the longer of two linear axes in meters. For a square feature, measure either axis. For a round feature, measure the diameter.
RST Road/Runway Surface Type (A) The physical surface composition of a road.
WID Width (meters) (A) A measurement of the shorter of two linear axes. For a square feature, measure either axis. For a round feature, width shall be equal to LEN.
ZV3 Airfield/Aerodrome Elevation (meters) (A) The highest point of an airport's usable runways measured in meters from mean sea level.

GB075 Taxiway (A) A prepared surface providing access to/from runways and aircraft parking area, terminals area, or service area, etc.

ZD020 Void Collection Area (A) An area lacking suitable source coverage, or where data is not required.
VCA Void Collection Attribute (A) Reason data is not collected.

ZD040 Named Location (T) A geographic place on earth, not normally appearing as a feature on a map, but having a name that is required to be placed on a map.

ZD045 Text Description (T) An area in which a characteristic or an activity pertaining to the area can be described and possibly is labeled on a product if deemed important at the time the product is being produced.

TABLE E-280. Transportation Integer Value Description Table.

Thematic Layer: Transportation
Coverage Name: trans
Feature Table Description: Transportation Integer Value Description Table
Table Name: int.vdt
DQ Layer Number: 11

{Header length}L;
Transportation Integer Value Description Table;-;
id=I,1,P,Row Identifier,-,-,-,:
table=T,12,N,Name of the Feature Table,-,-,-,:
attribute=T,3,N,Column Name,-,-,-,:
value=S,1,N,Unique Value of Attribute,-,-,-,:
description=T,*,N,Description of Value,-,-,-,:;

1	aerofacp.pft	apt	0	Unknown
2	aerofacp.pft	apt	4	Seaplane Base
3	aerofacp.pft	apt	9	Heliport
4	aerofacp.pft	apt	11	Heliport at Hospital
5	aerofacp.pft	apt	14	Airport/Airfield
6	aerofacp.pft	cod	2	Limits and Information Unknown
7	aerofacp.pft	exs	0	Unknown
8	aerofacp.pft	exs	5	Under Construction
9	aerofacp.pft	exs	6	Abandoned/Disused
10	aerofacp.pft	exs	7	Destroyed
11	aerofacp.pft	exs	28	Operational
12	aerofacp.pft	exs	601	Damaged
13	aerofacp.pft	use	0	Unknown
14	aerofacp.pft	use	8	Military
15	aerofacp.pft	use	22	Joint Military/Civilian
16	aerofacp.pft	use	23	International
17	aerofacp.pft	use	49	Civilian/Public
18	aerofacp.pft	use	999	Other
19	harborp.pft	mac	0	Unknown
20	harborp.pft	mac	53	Seaplane Anchorage
21	misaerop.pft	exs	0	Unknown
22	misaerop.pft	exs	1	Definite
23	misaerop.pft	exs	2	Doubtful
24	misaerop.pft	exs	3	Reported
25	misaerop.pft	hgt	0	Unknown
26	misaerop.pft	lfa	0	Unknown
27	misaerop.pft	lfa	10	Rotating Beacon
28	misaerop.pft	lfa	26	Strobe
29	misaerop.pft	lfa	53	Beacon
30	misaerop.pft	zv2	29999	Unknown
31	bridgec.pft	bcc	0	Unknown
32	bridgec.pft	bcc	1	Easy
33	bridgec.pft	bcc	2	Difficult
34	bridgec.pft	bcc	3	Impossible
35	bridgec.pft	bot	0	Unknown
36	bridgec.pft	bot	4	Draw/Bascule
37	bridgec.pft	bot	10	Swing

TABLE E-280. Transportation Integer Value Description Table (Continued).

38	bridgec.pft	bot	11	Lift
39	bridgec.pft	bot	12	Retractile
40	bridgec.pft	bot	13	Not Applicable
41	bridgec.pft	bsc	0	Unknown
42	bridgec.pft	bsc	1	Arch (assume open spandrel)
43	bridgec.pft	bsc	2	Cantilever
44	bridgec.pft	bsc	3	Deck
45	bridgec.pft	bsc	5	Floating Bridge/Pontoon
46	bridgec.pft	bsc	6	Girder
47	bridgec.pft	bsc	8	Truss
48	bridgec.pft	bsc	9	Suspension
49	bridgec.pft	bsc	12	Transporter
50	bridgec.pft	bsc	15	Slab
51	bridgec.pft	bsc	16	Stringer (beam)
52	bridgec.pft	bsc	26	Arch (closed spandrel)
53	bridgec.pft	bsc	27	Cable Stayed
54	bridgec.pft	bsc	999	Other
55	bridgec.pft	exs	0	Unknown
56	bridgec.pft	exs	5	Under Construction
57	bridgec.pft	exs	7	Destroyed
58	bridgec.pft	exs	28	Operational
59	bridgec.pft	hca	0	Unknown
60	bridgec.pft	idn	0	Unknown
61	bridgec.pft	lc1	0	Unknown
62	bridgec.pft	lc2	0	Unknown
63	bridgec.pft	lc3	0	Unknown
64	bridgec.pft	lc4	0	Unknown
65	bridgec.pft	len	0	Unknown
66	bridgec.pft	mcc	0	Unknown
67	bridgec.pft	mcc	21	Concrete
68	bridgec.pft	mcc	62	Masonry (Brick/Stone)
69	bridgec.pft	mcc	77	Prestressed Concrete
70	bridgec.pft	mcc	83	Reinforced Concrete
71	bridgec.pft	mcc	107	Steel
72	bridgec.pft	mcc	108	Stone
73	bridgec.pft	mcc	117	Wood
74	bridgec.pft	mcc	999	Other
75	bridgec.pft	nos	0	Unknown
76	bridgec.pft	ohc	0	Unknown
77	bridgec.pft	ohc	501	Unlimited
78	bridgec.pft	ohc	502	Restricted
79	bridgec.pft	tuc	0	Unknown
80	bridgec.pft	tuc	1	Both Road and Railroad
81	bridgec.pft	tuc	3	Railroad
82	bridgec.pft	tuc	4	Road
83	bridgec.pft	ubc	0	Unknown
84	bridgec.pft	wd1	0	Unknown
85	bridgec.pft	wt2	0	Unknown
86	bridgec.pft	yln	0	Unknown
87	contric.pft	len	0	Unknown
88	contric.pft	tuc	0	Unknown

TABLE E-280. Transportation Integer Value Description Table (Continued).

89	contric.pft	tuc	3	Railroad
90	contric.pft	tuc	4	Road
91	contric.pft	wd1	0	Unknown
92	contric.pft	wd2	0	Unknown
93	ferryc.pft	exs	0	Unknown
94	ferryc.pft	exs	5	Under Construction
95	ferryc.pft	exs	6	Abandoned/Disused
96	ferryc.pft	exs	7	Destroyed
97	ferryc.pft	exs	28	Operational
98	ferryc.pft	exs	601	Damaged
99	ferryc.pft	fcl	0	Unknown
100	ferryc.pft	tuc	0	Unknown
101	ferryc.pft	tuc	1	Both Road and Railroad
102	ferryc.pft	tuc	3	Railroad
103	ferryc.pft	tuc	4	Road
104	mtnpssc.pft	zv2	29999	Unknown
105	steepc.pft	sgc	999	Unknown
106	steepc.pft	tuc	0	Unknown
107	steepc.pft	tuc	1	Both Road and Railroad
108	steepc.pft	tuc	2	Railroad
109	steepc.pft	tuc	3	Road
110	tunnelc.pft	exs	0	Unknown
111	tunnelc.pft	exs	5	Under Construction
112	tunnelc.pft	exs	28	Operational
113	tunnelc.pft	hca	0	Unknown
114	tunnelc.pft	len	0	Unknown
115	tunnelc.pft	ohc	0	Unknown
116	tunnelc.pft	tuc	0	Unknown
117	tunnelc.pft	tuc	1	Both Road and Railroad
118	tunnelc.pft	tuc	3	Railroad
119	tunnelc.pft	tuc	4	Road
120	tunnelc.pft	use	0	Unknown
121	tunnelc.pft	use	115	Snow Shed
122	tunnelc.pft	use	116	Rock Shed
123	bridgel.lft	bcc	0	Unknown
124	bridgel.lft	bcc	1	Easy
125	bridgel.lft	bcc	2	Difficult
126	bridgel.lft	bcc	3	Impossible
127	bridgel.lft	bot	0	Unknown
128	bridgel.lft	bot	4	Draw/Bascule
129	bridgel.lft	bot	10	Swing
130	bridgel.lft	bot	11	Lift
131	bridgel.lft	bot	12	Retractile
132	bridgel.lft	bot	13	Not Applicable
133	bridgel.lft	bsc	0	Unknown
134	bridgel.lft	bsc	1	Arch (assume open spandrel)
135	bridgel.lft	bsc	2	Cantilever
136	bridgel.lft	bsc	3	Deck
137	bridgel.lft	bsc	5	Floating Bridge/Pontoon
138	bridgel.lft	bsc	6	Girder
139	bridgel.lft	bsc	8	Truss

TABLE E-280. Transportation Integer Value Description Table (Continued).

140	bridgel.lft	bsc	9	Suspension
141	bridgel.lft	bsc	12	Transporter
142	bridgel.lft	bsc	15	Slab
143	bridgel.lft	bsc	16	Stringer (beam)
144	bridgel.lft	bsc	26	Arch (closed spandrel)
145	bridgel.lft	bsc	27	Cable Stayed
146	bridgel.lft	bsc	999	Other
147	bridgel.lft	exs	0	Unknown
148	bridgel.lft	exs	5	Under Construction
149	bridgel.lft	exs	7	Destroyed
150	bridgel.lft	exs	28	Operational
151	bridgel.lft	hca	0	Unknown
152	bridgel.lft	idn	0	Unknown
153	bridgel.lft	lc1	0	Unknown
154	bridgel.lft	lc2	0	Unknown
155	bridgel.lft	lc3	0	Unknown
156	bridgel.lft	lc4	0	Unknown
157	bridgel.lft	len	0	Unknown
158	bridgel.lft	nos	0	Unknown
159	bridgel.lft	ohc	0	Unknown
160	bridgel.lft	ohc	501	Unlimited
161	bridgel.lft	ohc	502	Restricted
162	bridgel.lft	tuc	0	Unknown
163	bridgel.lft	tuc	1	Both Road and Railroad
164	bridgel.lft	tuc	3	Railroad
165	bridgel.lft	tuc	4	Road
166	bridgel.lft	ubc	0	Unknown
167	bridgel.lft	wd1	0	Unknown
168	bridgel.lft	wt2	0	Unknown
169	ferryl.lft	exs	0	Unknown
170	ferryl.lft	exs	5	Under Construction
171	ferryl.lft	exs	6	Abandoned/Disused
172	ferryl.lft	exs	7	Destroyed
173	ferryl.lft	exs	28	Operational
174	ferryl.lft	exs	601	Damaged
175	ferryl.lft	fcl	0	Unknown
176	ferryl.lft	tuc	0	Unknown
177	ferryl.lft	tuc	1	Both Road and Railroad
178	ferryl.lft	tuc	3	Railroad
179	ferryl.lft	tuc	4	Road
180	harborl.lft	len	0	Unknown
181	harborl.lft	wid	0	Unknown
182	harborl.lft	vrr	0	Unknown
183	harborl.lft	vrr	1	Above Surface/Does not cover (At High Water)
184	liftl.lft	use	0	Unknown
185	liftl.lft	use	120	Recreational
186	liftl.lft	use	130	Transportation
187	liftl.lft	use	999	Other
188	liftl.lft	yht	0	Unknown
189	liftl.lft	yht	1	<= 0.5

TABLE E-280. Transportation Integer Value Description Table (Continued).

190	liftl.lft	yht	2	> 0.5 and <= 1.0
191	liftl.lft	yht	3	> 1.0 and <= 1.5
192	liftl.lft	yht	4	> 1.5 and <= 2.0
193	liftl.lft	yht	5	> 2.0 and <= 5.0
194	liftl.lft	yht	6	> 5.0 and <= 10.0
195	liftl.lft	yht	7	> 10.0 and <= 20.0
196	liftl.lft	yht	8	> 20.0 and <= 35.0
197	liftl.lft	yht	9	> 35.0
198	railrdl.lft	ctl	0	Unknown
199	railrdl.lft	exs	0	Unknown
200	railrdl.lft	exs	5	Under Construction
201	railrdl.lft	exs	6	Abandoned/Disused
202	railrdl.lft	exs	7	Destroyed
203	railrdl.lft	exs	8	Dismantled
204	railrdl.lft	exs	28	Operational
205	railrdl.lft	loc	0	Unknown
206	railrdl.lft	loc	8	On Ground Surface
207	railrdl.lft	loc	25	Suspended/Elevated above Ground or Water Surface
208	railrdl.lft	ltn	0	Unknown
209	railrdl.lft	rgc	0	Unknown
210	railrdl.lft	rgc	1	Broad Gauge
211	railrdl.lft	rgc	2	Narrow/Narrow Gauge
212	railrdl.lft	rgc	3	Normal (Standard) Gauge
213	railrdl.lft	rra	0	Unknown
214	railrdl.lft	rra	1	Electrified Track
215	railrdl.lft	rra	3	Overhead Electrified
216	railrdl.lft	rra	4	Non-Electrified
217	railrdl.lft	rrc	0	Unknown
218	railrdl.lft	rrc	15	Inclined Railway
219	railrdl.lft	rsa	0	Unknown
220	railrdl.lft	rsa	1	Spur
221	railrdl.lft	rsa	2	Siding
222	railrdl.lft	rsa	3	Passing
223	railrdl.lft	sgc	999	Unknown
224	roadl.lft	acc	0	Unknown
225	roadl.lft	acc	1	Accurate
226	roadl.lft	acc	2	Approximate
227	roadl.lft	exs	0	Unknown
228	roadl.lft	exs	5	Under Construction
229	roadl.lft	exs	28	Operational
230	roadl.lft	loc	0	Unknown
231	roadl.lft	loc	8	On Ground Surface
232	roadl.lft	loc	25	Suspended/Elevated above Ground or Water Surface
233	roadl.lft	med	0	Unknown
234	roadl.lft	med	1	With Median
235	roadl.lft	med	2	Without Median
236	roadl.lft	rst	0	Unknown
237	roadl.lft	rst	1	Hard/Paved
238	roadl.lft	rst	2	Loose/Unpaved

TABLE E-280. Transportation Integer Value Description Table (Continued).

239	roadl.lft	sgc	999	Unknown
240	roadl.lft	wd1	0	Unknown
241	roadl.lft	wtc	0	Unknown
242	roadl.lft	wtc	1	All Weather
243	roadl.lft	wtc	2	Fair/Dry Weather
244	trackl.lft	acc	0	Unknown
245	trackl.lft	acc	1	Accurate
246	trackl.lft	acc	2	Approximate
247	trackl.lft	wd1	0	Unknown
248	trackl.lft	wtc	0	Unknown
249	trackl.lft	wtc	2	Fair/Dry Weather
250	trackl.lft	wtc	3	Winter Only
251	traill.lft	wtc	0	Unknown
252	traill.lft	wtc	2	Fair/Dry Weather
253	tunnell.lft	exs	0	Unknown
254	tunnell.lft	exs	5	Under Construction
255	tunnell.lft	exs	28	Operational
256	tunnell.lft	hca	0	Unknown
257	tunnell.lft	len	0	Unknown
258	tunnell.lft	ohc	0	Unknown
259	tunnell.lft	tuc	0	Unknown
260	tunnell.lft	tuc	1	Both Road and Railroad
261	tunnell.lft	tuc	3	Railroad
262	tunnell.lft	tuc	4	Road
263	tunnell.lft	use	0	Unknown
264	tunnell.lft	use	115	Snow Shed
265	tunnell.lft	use	116	Rock Shed
266	aerofaca.aft	apt	0	Unknown
267	aerofaca.aft	apt	4	Seaplane Base
268	aerofaca.aft	apt	9	Heliport
269	aerofaca.aft	apt	14	Airport/Airfield
270	aerofaca.aft	cod	1	Limits and Information Known
271	aerofaca.aft	cod	2	Limits and Information Unknown
272	aerofaca.aft	exs	0	Unknown
273	aerofaca.aft	exs	5	Under Construction
274	aerofaca.aft	exs	6	Abandoned/Disused
275	aerofaca.aft	exs	7	Destroyed
276	aerofaca.aft	exs	28	Operational
277	aerofaca.aft	exs	601	Damaged
278	aerofaca.aft	use	0	Unknown
279	aerofaca.aft	use	8	Military
280	aerofaca.aft	use	22	Joint Military/Civilian
281	aerofaca.aft	use	23	International
282	aerofaca.aft	use	49	Civilian/Public
283	harbora.aft	len	0	Unknown
284	harbora.aft	loc	0	Unknown
285	harbora.aft	loc	15	On Water Surface/Floating
286	harbora.aft	loc	30	Non-Floating
287	harbora.aft	mac	0	Unknown
288	harbora.aft	mac	53	Seaplane Anchorage
289	harbora.aft	vrr	0	Unknown

TABLE E-280. Transportation Integer Value Description Table (Continued).

290	harbora.aft	vrr	1	Above Surface/Does not cover (At High Water)
291	harbora.aft	wid	0	Unknown
292	resta.aft	wid	0	Unknown
293	rryarda.aft	ctl	0	Unknown
294	rryarda.aft	exs	0	Unknown
295	rryarda.aft	exs	5	Under Construction
296	rryarda.aft	exs	6	Abandoned/Disused
297	rryarda.aft	exs	28	Operational
298	runwaya.aft	exs	0	Unknown
299	runwaya.aft	exs	5	Under Construction
300	runwaya.aft	exs	6	Abandoned/Disused
301	runwaya.aft	exs	7	Destroyed
302	runwaya.aft	exs	27	Closed/Locked
303	runwaya.aft	exs	28	Operational
304	runwaya.aft	exs	59	Not Usable
305	runwaya.aft	len	0	Unknown
306	runwaya.aft	rst	0	Unknown
307	runwaya.aft	rst	6	Natural
308	runwaya.aft	rst	7	Permanent
309	runwaya.aft	rst	8	Temporary
310	runwaya.aft	wid	0	Unknown
311	runwaya.aft	zv3	29999	Unknown
312	storveha.aft	tuc	0	Unknown
313	storveha.aft	tuc	22	Automotive
314	travoida.aft	vca	0	Unknown
315	travoida.aft	vca	2	Area Too Rough to Collect
316	travoida.aft	vca	3	No Available Imagery
317	travoida.aft	vca	6	No Available Map Source
318	travoida.aft	vca	7	No Suitable Imagery

E.3.14 Utilities coverage.

TABLE E-281. Content and format for Utilities coverage feature class schema table.

Thematic Layer: Utilities
Coverage Name: util
Feature Table Description: Utilities Feature Class Schema Table
Table Name: fcs
DQ Layer Number: 12

```
{Header length}L;
Utilities Feature Class Schema Table;-;
id=I,1,P,Row Identifier,-,-,-,:
feature_class=T,8,N,Name of Feature Class,-,-,-,:
table1=T,12,N,First Table,-,-,-,:
table1_key=T,16,N,Column Name in First Table,-,-,-,:
table2=T,12,N,Second Table,-,-,-,:
table2_key=T,16,N,Column Name in Second Table,-,-,-,:;
```

1	commp	commp.pft	end_id	end	id
2	commp	end	id	commp.pft	end_id
3	solarp	solarp.pft	end_id	end	id
4	solarp	end	id	solarp.pft	end_id
5	pumpingp	pumpingp.pft	end_id	end	id
6	pumpingp	end	id	pumpingp.pft	end_id
7	substatp	substatp.pft	end_id	end	id
8	substatp	end	id	substatp.pft	end_id
9	commc	commc.pft	cnd_id	cnd	id
10	commc	cnd	id	commc.pft	cnd_id
11	cxpipec	cxpipec.pft	cnd_id	cnd	id
12	cxpipec	cnd	id	cxpipec.pft	cnd_id
13	utilnode	utilnode.pft	cnd_id	cnd	id
14	utilnode	cnd	id	utilnode.pft	cnd_id
15	pipel	pipel.lft	id	pipel.ljt	pipel.lft_id
16	pipel	pipel.ljt	edg_id	edg	id
17	pipel	edg	id	pipel.ljt	edg_id
18	pipel	pipel.ljt	pipel.lft_id	pipel.lft	id
19	powerl	powerl.lft	id	powerl.ljt	powerl.lft_id
20	powerl	powerl.ljt	edg_id	edg	id
21	powerl	edg	id	powerl.ljt	edg_id
22	powerl	powerl.ljt	powerl.lft_id	powerl.lft	id
23	telel	telel.lft	id	telel.ljt	telel.lft_id
24	telel	telel.ljt	edg_id	edg	id
25	telel	edg	id	telel.ljt	edg_id
26	telel	telel.ljt	telel.lft_id	telel.lft	id
27	comma	comma.aft	id	comma.ajt	comma.aft_id
28	comma	comma.ajt	fac_id	fac	id
29	comma	fac	id	comma.ajt	fac_id
30	comma	comma.ajt	comma.aft_id	comma.aft	id
31	utilarea	utilarea.aft	id	utilarea.ajt	utilarea.aft_id
32	utilarea	utilarea.ajt	fac_id	fac	id
33	utilarea	fac	id	utilarea.ajt	fac_id
34	utilarea	utilarea.ajt	utilarea.aft_id	utilarea.aft	id

TABLE E-281. Content and format for Utilities coverage feature class schema Table (Continued).

35	utivoida	utivoida.aft	id	utivoida.ajt	utivoida.aft_id
36	utivoida	utivoida.ajt	fac_id	fac	id
37	utivoida	fac	id	utivoida.ajt	fac_id
38	utivoida	utivoida.ajt	utivoida.aft_id	utivoida.aft	id
39	utiltxt	utiltxt.tft	txt_id	txt	id
40	utiltxt	txt	id	utiltxt.tft	txt_id

TABLE E-282. Communication Point Feature Table.

Thematic Layer: Utilities
Coverage Name: util
Feature Table Description: Communication Point Feature Table
Table Name: commp.pft
DQ Layer Number: 12
Portrayal Criteria: For AT010 and AT080 if height < 46 meters, then must be landmark feature.

```
{Header length}L;
Communication Point Feature Table;-;
id=I,1,P,Row Identifier,-,-,-,:
f_code=T,5,N,FACC Feature Code,char.vdt,f_code1.pti,-,:
exs=S,1,N,Existence Category,int.vdt,-,-,:
hgt=S,1,N,Height Above Surface Level (meters),int.vdt,-,-,:
len=S,1,N,Length/Diameter (meters),int.vdt,-,-,:
nam=T,*,N,Name,char.vdt,-,-,:
nst=S,1,N,Navigation System Types,int.vdt,-,-,:
zv2=S,1,N,Highest Z-value (meters),int.vdt,-,-,:
tile_id=S,1,N,Tile Reference ID,-,tile1_id.pti,-,:
end_id=I,1,N,Entity Node Primitive ID,-,end1_id.pti,-,:;
```

Column	Description	Value	Value Meaning	Applicable f_code for Each Attribute Value
id	Row Identifier	Sequential beginning with 1		
f_code	FACC Feature Code			
		AT010	Disk/Dish	
		AT050	Communication Building	
		AT080	Communication Tower	
exs	Existence Category (some value added)			
		0	Unknown	AT010,AT050,AT080
		1	Definite	AT010,AT050,AT080
		2	Doubtful	AT010,AT050,AT080
		3	Reported	AT010,AT050,AT080
		5	Under Construction (v/a)	AT050,AT080
		6	Abandoned/Disused (v/a)	AT050,AT080
		7	Destroyed (v/a)	AT050,AT080
		28	Operational (v/a)	AT050,AT080
		601	Damaged (v/a)	AT050,AT080

TABLE E-282. Communication Point Feature Table (Continued).

hgt	Height Above Surface Level (meters)			
		0	Unknown	AT010,AT050,AT080
		> 0		AT010,AT050,AT080
len	Length/Diameter (meters)			
		-32768	Null	AT010,AT080
		0	Unknown	AT050
		<=40		AT050
nam	Name			
	Variable length			
	text = zero-length		Null	AT010
		Character text string		AT050,AT080
		UNK (No entry present)		AT050,AT080
nst	Navigation System Types			
		-32768	Null	AT010
		0	Unknown	AT050,AT080
		12	Radio	AT050,AT080
		13	Radio Telephone	AT050
		15	TV	AT050,AT080
		16	Microwave	AT050,AT080
		33	Radio Telegraph	AT050,AT080
zv2	Highest Z-value (meters)			
		29999	Unknown	AT010,AT050,AT080
		-400 to 11999		AT010,AT050,AT080

TABLE E-283. Solar Point Feature Table.

Thematic Layer:	Utilities
Coverage Name:	util
Feature Table Description:	Solar Point Feature Table
Table Name:	solarp.pft
DQ Layer Number:	12

```
{Header length}L;
Solar Point Feature Table;-;
id=I,1,P,Row Identifier,-,-,-,:
f_code=T,5,N,FACC Feature Code,char.vdt,-,-,:
len=S,1,N,Length/Diameter (meters),int.vdt,-,-,:
tile_id=S,1,N,Tile Reference ID,-,tile2_id.pti,-,:
end_id=I,1,N,Entity Node Primitive ID,-,end2_id.pti,-,:;
```

Column	Description	Value	Value Meaning	Applicable f_code for Each Attribute Value
id	Row Identifier	Sequential beginning with 1		
f_code	FACC Feature Code			
		AD020	Solar Panels	
len	Length/Diameter (meters)			
		0	Unknown	AD020
		<= 65		AD020

TABLE E-284. Pumping Point Feature Table.

Thematic Layer: Utilities
Coverage Name: util
Feature Table Description: Pumping Point Feature Table
Table Name: pumpingp.pft
DQ Layer Number: 12
Portrayal Criteria: Must be landmark and width < 125 meters.

```
{Header length}L;
Pumping Point Feature Table;-;
id=I,1,P,Row Identifier,-,-,-,:
f_code=T,5,N,FACC Feature Code,char.vdt,-,-,:
exs=S,1,N,Existence Category,int.vdt,-,-,:
hgt=S,1,N,Height Above Surface Level (meters),int.vdt,-,-,:
pro=S,1,N,Product Category,int.vdt,-,-,:
wid=S,1,N,Width (meters),int.vdt,-,-,:
tile_id=S,1,N,Tile Reference ID,-,tile3_id.pti,-,:
end_id=I,1,N,Entity Node Primitive ID,-,end3_id.pti,-,:;
```

Column	Description	Value	Value Meaning	Applicable f_code for Each Attribute Value
id	Row Identifier	Sequential beginning with 1		
f_code	FACC Feature Code			
		AQ116	Pumping Station	
exs	Existence Category (value added)			
		0	Unknown (default)	AQ116
		5	Under Construction	AQ116
		6	Abandoned/Disused	AQ116
		7	Destroyed	AQ116
		28	Operational	AQ116
		601	Damaged	AQ116
hgt	Height Above Surface Level (meters)			
		0	Unknown	AQ116
		>0		AQ116
pro	Product Category			
		0	Unknown	AQ116
		38	Gas	AQ116
		67	Oil	AQ116
		116	Water	AQ116
		999	Other	AQ116
wid	Width (meters)			
		0	Unknown	AQ116
		< 125		AQ116

TABLE E-285. Substation Point Feature Table.

Thematic Layer:	Utilities
Coverage Name:	util
Feature Table Description:	Substation Point Feature Table
Table Name:	substatp.pft
DQ Layer Number:	12
Portrayal Criteria:	Must be landmark and width <= 40 meters.

```
{Header length}L;
Substation Point Feature Table;-;
id=I,1,P,Row Identifier,-,-,-,:
f_code=T,5,N,FACC Feature Code,char.vdt,-,-,:
exs=S,1,N,Existence Category,int.vdt,-,-,:
wid=S,1,N,Width (meters),int.vdt,-,-,:
tile_id=S,1,N,Tile Reference ID,-,tile4_id.pti,-,:
end_id=I,1,N,Entity Node Primitive ID,-,end4_id.pti,-,:;
```

Column	**Description**	**Value**	**Value Meaning**	**Applicable f_code for Each Attribute Value**
id	Row Identifier	Sequential beginning with 1		
f_code	FACC Feature Code			
		AD030	Substation/Transformer Yard	
exs	Existence Category (value added)			
		0	Unknown (default)	AD030
		5	Under Construction	AD030
		6	Abandoned/Disused	AD030
		7	Destroyed	AD030
		28	Operational	AD030
		601	Damaged	AD030
wid	Width (meters)			
		0	Unknown	AD030
		<=40		AD030

TABLE E-286. Communication Node Feature Table.

Thematic Layer: Utilities
Coverage Name: util
Feature Table Description: Communication Node Feature Table
Table Name: commc.pft
DQ Layer Number: 12
Portrayal Criteria: For AT080 if height < 46 meters, then must be landmark feature.

```
{Header length}L;
Communication Node Feature Table;-;
id=I,1,P,Row Identifier,-,-,-,:
f_code=T,5,N,FACC Feature Code,char.vdt,-,-,:
exs=S,1,N,Existence Category,int.vdt,-,-,:
hgt=S,1,N,Height Above Surface Level (meters),int.vdt,-,-,:
nam=T,*,N,Name,char.vdt,-,-,:
nst=S,1,N,Navigation System Types,int.vdt,-,-,:
zv2=S,1,N,Highest Z-value (meters),int.vdt,-,-,:
tile_id=S,1,N,Tile Reference ID,-,tile1_id.nti,-,:
cnd_id=I,1,N,Connected Node Primitive ID,-,cnd1_id.nti,-,:;
```

Column	Description	Value	Value Meaning	Applicable f_code for Each Attribute Value
id	Row Identifier	Sequential beginning with 1		
f_code	FACC Feature Code			
		AT080	Communication Tower	
exs	Existence Category (some value added)			
		0	Unknown	AT080
		1	Definite	AT080
		2	Doubtful	AT080
		3	Reported	AT080
		5	Under Construction (v/a)	AT080
		6	Abandoned/Disused (v/a)	AT080
		7	Destroyed (v/a)	AT080
		28	Operational (v/a)	AT080
		601	Damaged (v/a)	AT080
hgt	Height Above Surface Level (meters)			
		0	Unknown	AT080
		>0		AT080
nam	Name			
		Character text string		AT080
		UNK (No entry present)		AT080
nst	Navigation System Types			
		0	Unknown	AT080
		12	Radio	AT080
		15	TV	AT080
		16	Microwave	AT080
		33	Radio Telegraph	AT080

TABLE E-286. Communication Node Feature Table (Continued).

zv2	Highest Z-value (meters)			
		29999	Unknown	AT080
		-400 to 11999		AT080

TABLE E-287. Pipeline Crossing Node Feature Table.

Thematic Layer: Utilities
Coverage Name: util
Feature Table Description: Pipeline Crossing Node Feature Table
Table Name: cxpipec.pft
DQ Layer Number: 12
Portrayal Criteria: Must be associated with portrayed pipeline and width <= 50 meters.

```
{Header length}L;
Pipeline Crossing Node Feature Table;-;
id=I,1,P,Row Identifier,-,-,-,:
f_code=T,5,N,FACC Feature Code,char.vdt,-,-,:
len=S,1,N,Length/Diameter (meters),int.vdt,-,-,:
loc=S,1,N,Location Category,int.vdt,-,-,:
wid=S,1,N,Width (meters),int.vdt,-,-,:
tile_id=S,1,N,Tile Reference ID,-,tile2_id.nti,-,:
cnd_id=I,1,N,Connected Node Primitive ID,-,cnd2_id.nti,-,:;
```

Column	Description	Value	Value Meaning	Applicable f_code for Each Attribute Value
id	Row Identifier	Sequential beginning with 1		
f_code	FACC Feature Code			
		AL195	Ramp [pipeline crossing point]	
len	Length/Diameter (meters)			
		0	Unknown	AL195
		>0		AL195
loc	Location Category			
		0	Unknown	AL195
		4	Below Surface/Submerged/ Underground	AL195
		8	On Ground Surface	AL195
		25	Suspended/Elevated above Ground or Water Surface	AL195
wid	Width (meters)			
		0	Unknown	AL195
		<= 50		AL195

TABLE E-288. Utility Node Feature Table.

Thematic Layer: Utilities
Coverage Name: util
Feature Table Description: Utility Node Feature Table
Table Name: utilnode.pft
DQ Layer Number: 12
Portrayal Criteria: For AD030 width <= 40 meters and a landmark feature and for AQ116 width < 125 meters.

```
{Header length}L;
Utility Node Feature Table;-;
id=I,1,P,Row Identifier,-,-,-,:
f_code=T,5,N,FACC Feature Code,char.vdt,f_code3.nti,-,:
exs=S,1,N,Existence Category,int.vdt,-,-,:
hgt=S,1,N,Height Above Surface Level (meters),int.vdt,-,-,:
pro=S,1,N,Product Category,int.vdt,-,-,:
wid=S,1,N,Width (meters),int.vdt,-,-,:
tile_id=S,1,N,Tile Reference ID,-,tile3_id.nti,-,:
cnd_id=I,1,N,Connected Node Primitive ID,-,cnd3_id.nti,-,:;
```

Column	Description	Value	Value Meaning	Applicable f_code for Each Attribute Value
id	Row Identifier	Sequential beginning with 1		
f_code	FACC Feature Code			
		AD030	Substation/Transformer Yard	
		AQ116	Pumping Station	
exs	Existence Category (value added)			
		0	Unknown (default)	AD030,AQ116
		5	Under Construction	AD030,AQ116
		6	Abandoned/Disused	AD030,AQ116
		7	Destroyed	AD030,AQ116
		28	Operational	AD030,AQ116
		601	Damaged	AD030,AQ116
hgt	Height Above Surface Level (meters)			
		-32768	Null	AD030
		0	Unknown	AQ116
		>0		AQ116
pro	Product Category			
		-32768	Null	AD030
		0	Unknown	AQ116
		38	Gas	AQ116
		67	Oil	AQ116
		116	Water	AQ116
		999	Other	AQ116
wid	Width (meters)			
		0	Unknown	AD030,AQ116
		<= 40		AD030
		< 125		AQ116

TABLE E-289. Pipeline Line Join Table.

(This table is used to combine linear utilities features with their associated edge primitives in a one-to-many relationship.)

```
{Header length}L;
Pipeline Line Join Table;-;
id=I,1,P,Row Identifier,-,-,-,:
pipel.lft_id=I,1,N,Feature Key,-,pipel.jti,-,:
tile_id=S,1,N,Tile Reference ID,-,tile1_id.jti,-,:
edg_id=I,1,N,Edge Primitive ID,-,edg1_id.jti,-,:;
```

TABLE E-290. Pipeline Line Feature Table.

Thematic Layer: Utilities
Coverage Name: util
Feature Table Description: Pipeline Line Feature Table
Table Name: pipel.lft
DQ Layer Number: 12
Portrayal Criteria: For AQ113 if underground length >= 1,250 meters or if above ground then length >= 250 meters and height >= 1.5 meters.

```
{Header length}L;
Pipeline Line Feature Table;-;
id=I,1,P,Row Identifier,-,-,-,:
f_code=T,5,N,FACC Feature Code,char.vdt,-,-,:
acc=S,1,N,Accuracy Category,int.vdt,-,-,:
exs=S,1,N,Existence Category,int.vdt,-,-,:
loc=S,1,N,Location Category,int.vdt,-,-,:
ohd=S,1,N,Derived Obstacle Height/Depth Category,int.vdt,-,-,:
pfh=S,1,N,Predominant Feature Height (decimeters),int.vdt,-,-,:
pro=S,1,N,Product Category,int.vdt,-,-,:;
```

Column	Description	Value	Value Meaning	Applicable f_code for Each Attribute Value
id	Row Identifier	Sequential beginning with 1		
f_code	FACC Feature Code			
		AQ113	Pipeline/Pipe	
acc	Accuracy Category			
		0	Unknown	AQ113
		1	Accurate	AQ113
		2	Approximate	AQ113
exs	Existence Category			
		0	Unknown	AQ113
		5	Under Construction	AQ113
		6	Abandoned/Disused	AQ113
		28	Operational	AQ113
		999	Other	AQ113

TABLE E-290. Pipeline Line Feature Table (Continued).

loc	Location Category			
		0	Unknown	AQ113
		4	Below Surface/Submerged/ Underground	AQ113
		8	On Ground Surface	AQ113
		25	Suspended/Elevated above Ground or Water Surface	AQ113
ohd	Derived Obstacle Height/Depth Category			
		0	Unknown	AQ113
		1	> 1.5 and <= 5.0	AQ113
		2	> 5.0 and <= 10.0	AQ113
		3	> 10.0 and <= 20.0	AQ113
		4	> 20.0 and <= 40.0	AQ113
		5	> 40.0	AQ113
pfh	Predominant Feature Height (decimeters)			
		0	Unknown	AQ113
			>= 15	AQ113
pro	Product Category			
		0	Unknown (default if length <1250 m)	AQ113
		13	Chemical	AQ113
		38	Gas	AQ113
		39	Gasoline	AQ113
		67	Oil	AQ113
		116	Water	AQ113
		999	Other	AQ113

TABLE E-291. Power Line Join Table.

(This table is used to combine linear utilities features with their associated edge primitives in a one-to-many relationship.)

```
{Header length}L;
Power Line Join Table;-;
id=I,1,P,Row Identifier,-,-,-,:
powerl.lft_id=I,1,N,Feature Key,-,powerl.jti,-,:
tile_id=S,1,N,Tile Reference ID,-,tile2_id.jti,-,:
edg_id=I,1,N,Edge Primitive ID,-,edg2_id.jti,-,:;
```

TABLE E-292. Power Line Feature Table.

Thematic Layer: Utilities
Coverage Name: util
Feature Table Description: Power Line Feature Table
Table Name: powerl.lft
DQ Layer Number: 12
Portrayal Criteria: For AT030 length >= 375 meters and prominent feature.

```
{Header length}L;
Power Line Feature Table;-;
id=I,1,P,Row Identifier,-,-,-,:
f_code=T,5,N,FACC Feature Code,char.vdt,-,-,:
acc=S,1,N,Accuracy Category,int.vdt,-,-,:
exs=S,1,N,Existence Category,int.vdt,-,-,:
tst=S,1,N,Transmission Line Suspension,int.vdt,-,-,:
yht=S,1,N,Height Range with Greater Precision,int.vdt,-,-,:;
```

Column	Description	Value	Value Meaning	Applicable f_code for Each Attribute Value
ID	Row Identifier	Sequential beginning with 1		
f_code	FACC Feature Code			
		AT030	Power Transmission Line	
acc	Accuracy Category			
		0	Unknown	AT030
		1	Accurate	AT030
		2	Approximate	AT030
exs	Existence Category (value added)			
		0	Unknown (default)	AT030
		5	Under Construction	AT030
		6	Abandoned/Disused	AT030
		7	Destroyed	AT030
		28	Operational	AT030
		601	Damaged	AT030

TABLE E-292. Power Line Feature Table (Continued).

tst	Transmission Line Suspension			
		0	Unknown	AT030
		1	Normal Suspension	AT030
		2	Catenary (Over Mountains)	AT030
		3	Catenary (Over Water)	AT030
yht	Height Range with Greater Precision (value added)			
		0	Unknown (default)	AT030
		1	<= 0.5	AT030
		2	> 0.5 and <= 1.0	AT030
		3	> 1.0 and <= 1.5	AT030
		4	> 1.5 and <= 2.0	AT030
		5	> 2.0 and <= 5.0	AT030
		6	> 5.0 and <= 10.0	AT030
		7	> 10.0 and <= 20.0	AT030
		8	> 20.0 and <= 35.0	AT030
		9	> 35.0	AT030

TABLE E-293. Telephone Line Join Table.

(This table is used to combine linear utilities features with their associated edge primitives in a one-to-many relationship.)

```
{Header length}L;
Telephone Line Join Table;-;
id=I,1,P,Row Identifier,-,-,-,:
telel.lft_id=I,1,N,Feature Key,-,telel.jti,-,:
tile_id=S,1,N,Tile Reference ID,-,tile3_id.jti,-,:
edg_id=I,1,N,Edge Primitive ID,-,edg3_id.jti,-,:;
```

TABLE E-294. Telephone Line Feature Table.

Thematic Layer: Utilities
Coverage Name: util
Feature Table Description: Telephone Line Feature Table
Table Name: telel.lft
DQ Layer Number: 12
Portrayal Criteria: For AT060 length >= 2,500 meters and landmark feature.

```
{Header length}L;
Telephone Line Feature Table;-;
id=I,1,P,Row Identifier,-,-,-,:
f_code=T,5,N,FACC Feature Code,char.vdt,-,-,:
exs=S,1,N,Existence Category,int.vdt,-,-,:;
```

Column	Description	Value	Value Meaning	Applicable f_code for Each Attribute Value
id	Row Identifier	Sequential beginning with 1		
f_code	FACC Feature Code			
		AT060	Telephone Line/Telegraph Line	
exs	Existence Category			
		0	Unknown	AT060
		31	Isolated	AT060
		61	Not Isolated	AT060

TABLE E-295. Communication Area Join Table.

(This table is used to combine area utilities features with their associated face primitives in a one-to-many relationship.)

```
{Header length}L;
Communication Area Join Table;-;
id=I,1,P,Row Identifier,-,-,-,:
comma.aft_id=I,1,N,Feature Key,-,comma.jti,-,:
tile_id=S,1,N,Tile Reference ID,-,tile4_id.jti,-,:
fac_id=I,1,N,Face Primitive ID,-,fac4_id.jti,-,:;
```

TABLE E-296. Communication Area Feature Table.

Thematic Layer:	Utilities
Coverage Name:	util
Feature Table Description:	Communication Area Feature Table
Table Name:	comma.aft
DQ Layer Number:	12
Portrayl Criteria:	AT050 length > 40 meters.

```
{Header length}L;
Communication Area Feature Table;-;
id=I,1,P,Row Identifier,-,-,-,:
f_code=T,5,N,FACC Feature Code,char.vdt,-,-,:
exs=S,1,N,Existence Category,int.vdt,-,-,:
hgt=S,1,N,Height Above Surface Level (meters),int.vdt,-,-,:
len=S,1,N,Length/Diameter (meters),int.vdt,-,-,:
nam=T,*,N,Name,char.vdt,-,-,:
nst=S,1,N,Navigation System Types,int.vdt,-,-,:;
```

Column	Description	Value	Value Meaning	Applicable f_code for Each Attribute Value
id	Row Identifier	Sequential beginning with 1		
f_code	FACC Feature Code			
		AT050	Communication Building	
exs	Existence Category (some value-added)			
		0	Unknown	AT050
		5	Under Construction (v/a)	AT050
		6	Abandoned/Disused (v/a)	AT050
		7	Destroyed (v/a)	AT050
		28	Operational (v/a)	AT050
		601	Damaged (v/a)	AT050
hgt	Height Above Surface Level (meters)			
		0	Unknown	AT050
		> 0		AT050

TABLE E-296. Communication Area Feature Table (Continued).

len	Length/Diameter (meters)			
		0	Unknown	AT050
		> 40		AT050
nam	Name			
		Character text string		AT050
		UNK (No entry present)		AT050
nst	Navigation System Types			
		0	Unknown	AT050
		12	Radio	AT050
		13	Radio Telephone	AT050
		15	TV	AT050
		16	Microwave	AT050
		33	Radio Telegraph	AT050

TABLE E-297. Utility Area Join Table.

(This table is used to combine area utilities features with their associated face primitives in a one-to-many relationship.)

```
{Header length}L;
Utility Area Join Table;-;
id=I,1,P,Row Identifier,-,-,-,:
utilarea.aft_id=I,1,N,Feature Key,-,utilarea.jti,-,:
tile_id=S,1,N,Tile Reference ID,-,tile5_id.jti,-,:
fac_id=I,1,N,Face Primitive ID,-,fac5_id.jti,-,:;
```

TABLE E-298. Utility Area Feature Table.

Thematic Layer: Utilities
Coverage Name: util
Feature Table Description: Utility Area Feature Table
Table Name: utilarea.aft
DQ Layer Number: 12
Portrayal Criteria: For AD010 width >= 40 meters, AD030 > 40 meters, and AQ116 width >= 125 meters and must be landmark.

```
{Header length}L;
Utility Area Feature Table;-;
id=I,1,P,Row Identifier,-,-,-,:
f_code=T,5,N,FACC Feature Code,char.vdt,f_code5.ati,-,:
exs=S,1,N,Existence Category,int.vdt,-,-,:
hgt=S,1,N,Height Above Surface Level (meters),int.vdt,-,-,:
nam=T,*,N,Name,char.vdt,-,-,:
ppc=S,1,N,Power Plant Category,int.vdt,-,-,:
pro=S,1,N,Product Category,int.vdt,-,-,:
wid=S,1,N,Width (meters),int.vdt,-,-,:;
```

Column	Description	Value	Value Meaning	Applicable f_code for Each Attribute Value
id	Row Identifier	Sequential beginning with 1		
f_code	FACC Feature Code			
		AD010	Power Plant	
		AD030	Substation/Transformer Yard	
		AQ116	Pumping Station	
exs	Existence Category (value added)			
		0	Unknown (default)	AD010,AD030,AQ116
		5	Under Construction	AD010,AD030,AQ116
		6	Abandoned/Disused	AD010,AD030,AQ116
		7	Destroyed	AD010,AD030,AQ116
		28	Operational	AD010,AD030,AQ116
		601	Damaged	AD010,AD030,AQ116

TABLE E-298. Utility Area Feature Table (Continued).

hgt	Height Above Surface Level (meters)			
		-32768	Null	AD030
		0	Unknown	AD010,AQ116
		>0		AD010,AQ116
nam	Name			
	Variable Length Text =			
		zero - length	Null	AD030,AQ116
		Character text string		AD010
		UNK (No entry present)		AD010
ppc	Power Plant Category			
		-32768	Null	AD030,AQ116
		0	Unknown	AD010
		1	Hydro-electric	AD010
		2	Nuclear	AD010
		3	Solar	AD010
		4	Thermal	AD010
		6	Tidal	AD010
		7	Internal Combustion	AD010
pro	Product Category			
		-32768	Null	AD010,AD030
		0	Unknown	AQ116
		13	Chemical	AQ116
		38	Gas	AQ116
		39	Gasoline	AQ116
		67	Oil	AQ116
		116	Water	AQ116
		999	Other	AQ116
wid	Width (meters)			
		0	Unknown	AD010,AD030,AQ116
		>= 40		AD010
		> 40		AD030
		>=125		AQ116

TABLE E-299. Utilities Void Collection Area Join Table.
(This table is used to combine utilities area features with their associated face primitives in a one-to-many relationship.)

```
{Header length}L;
Utilities Void Collection Area Join Table;-;
id=I,1,P,Row Identifier,-,-,-,:
utivoida.aft_id=I,1,N,Feature Key,-,utivoida.jti,-,:
tile_id=S,1,N,Tile Reference ID,-,tile6_id.jti,-,:
fac_id=I,1,N,Face Primitive ID,-,fac6_id.jti,-,:;
```

TABLE E-300. Utilities Void Collection Area Feature Table.

Thematic Layer: Utilities
Coverage Name: util
Feature Table Description: Utilities Void Collection Area Feature Table
Table Name: utivoida.aft
DQ Layer Number: 12
Portrayal Criteria: For ZD020 area >= 15,625 square meters

```
{Header length}L;
Utilities Void Collection Area Feature Table;-;
id=I,1,P,Row Identifier,-,-,-,:
f_code=T,5,N,FACC Feature Code,char.vdt,-,-,:
vca=S,1,N,Void Collection Attribute,int.vdt,-,-,:;
```

Column	Description	Value	Value Meaning	Applicable f_code for Each Attribute Value
id	Row Identifier	Sequential beginning with 1		
f_code	FACC Feature Code			
		ZD020	Void Collection Area	
vca	Void Collection Attribute			
		0	Unknown	ZD020
		2	Area Too Rough to Collect	ZD020
		3	No Available Imagery	ZD020
		6	No Available Map Source	ZD020
		7	No Suitable Imagery	ZD020

TABLE E-301. Utilities Text Feature Table.

Thematic Layer: Utilities
Coverage Name: util
Feature Table Description: Utilities Text Feature Table
Table Name: utiltxt.tft
DQ Layer Number: 12

```
{Header length}L;
Utilities Text Feature Table;-;
id=I,1,P,Row Identifier,-,-,-,:
f_code=T,5,N,FACC Feature Code,char.vdt,f_code.tti,-,:
tile_id=S,1,N,Tile Reference ID,-,tile_id.tti,-,:
txt_id=I,1,N,Text Primitive ID,-,txt_id.tti,-,:;
```

Column	Description	Value	Value Meaning	Applicable f_code for Each Attribute Value
id	Row Identifier	Sequential beginning with 1		
f_code	FACC Feature Code			
		ZD040	Named Location	
		ZD045	Text Description	

TABLE E-302. Utilities Feature Class Attribute Table.

Thematic Layer: Utilities
Coverage Name: util
Table Description: Utilities Feature Class Attribute Table
Table Name: fca
DQ Layer Number: 12

```
{Header length}L;
Utilities Feature Class Attribute Table;-;
id=I,1,P,Row Identifier,-,-,-,:
fclass=T,8,U,Feature Class Name,-,-,-,:
type=T,1,N,Feature Type,char.vdt,-,-,:
descr=T,*,N,Description,-,-,-,:;
```

Column Value	Description	Value	Value Meaning	Applicable Feature Class for Each Attribute
id	Row Identifier	Sequential beginning with 1		
fclass	Feature Class Name			
		commp		
		solarp		
		pumpingp		
		substatp		
		commc		
		cxpipec		
		utilnode		
		pipel		
		powerl		
		telel		
		comma		
		utilarea		
		utivoida		
		utiltxt		
type	Feature Type			
		P	Point/Node Feature	commp, solarp, pumpingp, substatp, commc, cxpipec, utilnode
		L	Line Feature	pipel, powerl, telel
		A	Area Feature	comma, utilarea, utivoida
		T	Text Feature	utiltxt

TABLE E-302. Utilities Feature Class Attribute Table (Continued).

descr	Description		
		Communication Point Feature	commp
		Solar Panel Point Feature	solarp
		Pumping Station Point Feature	pumpingp
		Substation Point Feature	substatp
		Communication Node Feature	commc
		Crossing Point Node Feature	cxpipec
		Utility Node Feature	utilnode
		Pipelines	pipel
		Power Transmission Lines	powerl
		Telephone/Telegraph Line	telel
		Communication Area Features	comma
		Utility Area Features	utilarea
		Utilities Void Collection Areas	utivoida
		Utilities Coverage Text	utiltxt

TABLE E-303. Utilities Character Value Description Table.

Thematic Layer: Utilities
Coverage Name: util
Feature Table Description: Utilities Character Value Description Table
Table Name: char.vdt
DQ Layer Number: 12

{Header length}L;
Utilities Character Value Description Table;-;
id=I,1,P,Row Identifier,-,-,-,:
table=T,12,N,Name of the Feature Table,-,-,-,:
attribute=T,6,N,Column Name,-,-,-,:
value=T,5,N,Unique Value of Attribute,-,-,-,:
description=T,*,N,Description of Value,-,-,-,:;

1	commp.pft	f_code	AT010	Disk/Dish
2	commp.pft	f_code	AT050	Communication Building
3	commp.pft	f_code	AT080	Communication Tower
4	commp.pft	nam	UNK	No entry present
5	solarp.pft	f_code	AD020	Solar Panels
6	pumpingp.pft	f_code	AQ116	Pumping Station
7	substatp.pft	f_code	AD030	Substation/Transformer Yard
8	commc.pft	f_code	AT080	Communication Tower
9	commc.pft	nam	UNK	No entry present
10	cxpipec.pft	f_code	AL195	Ramp
11	utilnode.pft	f_code	AD030	Substation/Transformer Yard
12	utilnode.pft	f_code	AQ116	Pumping Station
13	pipel.lft	f_code	AQ113	Pipeline/Pipe
14	powerl.lft	f_code	AT030	Power Transmission Line
15	telel.lft	f_code	AT060	Telephone Line/Telegraph Line
16	comma.aft	f_code	AT050	Communication Building
17	comma.aft	nam	UNK	No entry present
18	utilarea.aft	f_code	AD010	Power Plant
19	utilarea.aft	f_code	AD030	Substation/Transformer Yard
20	utilarea.aft	f_code	AQ116	Pumping Station
21	utilarea.aft	nam	UNK	No entry present
22	utivoida.aft	f_code	ZD020	Void Collection Area
23	utiltxt.tft	f_code	ZD040	Named Location
24	utiltxt.tft	f_code	ZD045	Text Description
25	fca	type	A	Area Feature
26	fca	type	L	Line Feature
27	fca	type	P	Point/Node Feature
28	fca	type	T	Text Feature

E.3.14.1 Utilities coverage glossary.

AD010 Power Plant (A) The building(s) and equipment necessary for the generation of electric power.
EXS Existence Category (A) The state or condition of the feature.
HGT Height Above Surface Level (meters) (A) Distance measured from the lowest point of the base at ground or water level (downhill side/downstream side) to the tallest point of the feature.
NAM Name (A) Any Identifier or code.
PPC Power Plant Category (A) Energy source used to generate power.
WID Width (meters) (A) A measurement of the shorter of two linear axes. For a square feature, measure either axis. For a round feature, width shall be equal to LEN.

AD020 Solar Panels (P) Units of solar cells for converting sunlight into electrical energy or heat. (See also AD010)
LEN Length/Diameter (meters) (P) A measurement of the longer of two linear axes in meters. For a square feature, measure either axis. For a round feature, measure the diameter.

AD030 Substation/Transformer Yard (P,N,A) A facility, along a power line route, in which electric current is transformed and/or distributed.
EXS Existence Category (P,N,A) The state or condition of the feature.
WID Width (meters) (P,N,A) A measurement of the shorter of two linear axes. For a square feature, measure either axis. For a round feature, width shall be equal to LEN.

AL195 Ramp (N) An inclined place usually man made for moving between two levels. (See also BB240)
LEN Length/Diameter (meters) (N) A measurement of the longer of two linear axes in meters. For a square feature, measure either axis. For a round feature, measure the diameter.
LOC Location Category (N) Status of feature relative to surrounding area or water.
WID Width (meters) (N) A measurement of the shorter of two linear axes. For a square feature, measure either axis. For a round feature, width shall be equal to LEN.

AQ113 Pipeline/Pipe (L) A tube or conveyance of solids, liquids, or gases.
ACC Accuracy Category (L) Accuracy of geographic position.
EXS Existence Category (L) The state or condition of the feature.
LOC Location Category (L) Status of feature relative to surrounding area or water.
OHD Derived Obstacle Height/Depth Category (L) Categorized maximum height of an obstacle feature, in meters, within delineated segment of area.
PFH Predominant Feature Height (decimeters) (L) Predominant height within delineation of feature.
PRO Product Category (L) Principal material involved or product resulting from activity at site.

AQ116 Pumping Station (P,N,A) A facility to move solids, liquids, or gases by means of pressure or suction.
EXS Existence Category (P,N,A) The state or condition of the feature.
HGT Height Above Surface Level (meters) (P,N,A) Distance measured from the lowest point of the base at ground or water level (downhill side/downstream side) to the tallest point of the feature.
PRO Product Category (P,N,A) Principal material involved or product resulting from activity at site.
WID Width (meters) (P,N,A) A measurement of the shorter of two linear axes. For a square feature, measure either axis. For a round feature, width shall be equal to LEN.

AT010 Disk/Dish (P) A concave object used for transmitting or receiving electronic signals.
EXS Existence Category (P) The state or condition of the feature.
HGT Height Above Surface Level (meters) (P) Distance measured from the lowest point of the base at ground or water level (downhill side/downstream side) to the tallest point of the feature.
ZV2 Highest Z-Value (meters) (P) Elevation above a given datum to the highest portion of the feature.

AT030 Power Transmission Line (L) A system of above ground wires including their supports, which transmits electricity over distance.
ACC Accuracy Category (L) Accuracy of geographic position.
EXS Existence Category (L) The state or condition of the feature.
TST Transmission Line Suspension (L) Power transmission lines that are suspended between pylons.
YHT Height Range with Greater Precision (L) Value indicating precise range in height (meters) within delineated area of feature.

AT050 Communication Building (P,A) A building in which communication signals are processed or controlled.
EXS Existence Category (P,A) The state or condition of the feature.
HGT Height Above Surface Level (meters) (P,A) Distance measured from the lowest point of the base at ground or water level (downhill side/downstream side) to the tallest point of the feature.
LEN Length/Diameter (meters) (P,A) A measurement of the longer of two linear axes in meters. For a square feature, measure either axis. For a round feature, measure the diameter.
NAM Name (P,A) Any Identifier or code.
NST Navigation System Types (P,A) Type of equipment or system used in electronic navigation (primary system).
ZV2 Highest Z-Value (meters) (P) Elevation above a given datum to the highest portion of the feature.

AT060 Telephone Line/Telegraph Line (L) A system of above ground wires, including their supports, which transmit electric signals over distance.
EXS Existence Category (L) The state or condition of the feature.

AT080 Communication Tower (P,N) A relatively tall structure used for transmitting and/or receiving electronic signals.
EXS Existence Category (P,N) The state or condition of the feature.
HGT Height Above Surface Level (meters) (P,N) Distance measured from the lowest point of the base at ground or water level (downhill side/downstream side) to the tallest point of the feature.
NAM Name (P,N) Any Identifier or code.
NST Navigation System Types (P,N) Type of equipment or system used in electronic navigation (primary system).
ZV2 Highest Z-Value (meters) (P,N) Elevation above a given datum to the highest portion of the feature.

ZD020 Void Collection Area (A) An area lacking suitable source coverage, or where data is not required.
VCA Void Collection Attribute (A) Reason data is not collected.

ZD040 Named Location (T) A geographic place on earth, not normally appearing as a feature on a map, but having a name that is required to be placed on a map.

ZD045 Text Description (T) An area in which a characteristic or an activity pertaining to the area can be described and possibly is labeled on a product if deemed important at the time the product is being produced.

TABLE E-304. Utilities Integer Value Description Table.

Thematic Layer: Utilities
Coverage Name: util
Feature Table Description: Utilities Integer Value Description Table
Table Name: int.vdt
DQ Layer Number: 12

{Header length}L;
Utilities Integer Value Description Table;-;
id=I,1,P,Row Identifier,-,-,-,:
table=T,12,N,Name of the Feature Table,-,-,-,:
attribute=T,3,N,Column Name,-,-,-,:
value=S,1,N,Unique Value of Attribute,-,-,-,:
description=T,*,N,Description of Value,-,-,-,:;

1	commp.pft	exs	0	Unknown
2	commp.pft	exs	1	Definite
3	commp.pft	exs	2	Doubtful
4	commp.pft	exs	3	Reported
5	commp.pft	exs	5	Under Construction
6	commp.pft	exs	6	Abandoned/Disused
7	commp.pft	exs	7	Destroyed
8	commp.pft	exs	28	Operational
9	commp.pft	exs	601	Damaged
10	commp.pft	hgt	0	Unknown
11	commp.pft	len	0	Unknown
12	commp.pft	nst	0	Unknown
13	commp.pft	nst	12	Radio
14	commp.pft	nst	13	Radio Telephone
15	commp.pft	nst	15	TV
16	commp.pft	nst	16	Microwave
17	commp.pft	nst	33	Radio Telegraph
18	commp.pft	zv2	29999	Unknown
19	pumpingp.pft	exs	0	Unknown
20	pumpingp.pft	exs	5	Under Construction
21	pumpingp.pft	exs	6	Abandoned/Disused
22	pumpingp.pft	exs	7	Destroyed
23	pumpingp.pft	exs	28	Operational
24	pumpingp.pft	exs	601	Damaged
25	pumpingp.pft	hgt	0	Unknown
26	pumpingp.pft	pro	0	Unknown
27	pumpingp.pft	pro	38	Gas
28	pumpingp.pft	pro	67	Oil
29	pumpingp.pft	pro	116	Water
30	pumpingp.pft	pro	999	Other
31	pumpingp.pft	wid	0	Unknown
32	solarp.pft	len	0	Unknown
33	substatp.pft	exs	0	Unknown
34	substatp.pft	exs	5	Under Construction
35	substatp.pft	exs	6	Abandoned/Disused
36	substatp.pft	exs	7	Destroyed
37	substatp.pft	exs	28	Operational

TABLE E-304. Utilities Integer Value Description Table (Continued).

38	substatp.pft	exs	601	Damaged
39	substatp.pft	wid	0	Unknown
40	commc.pft	exs	0	Unknown
41	commc.pft	exs	1	Definite
42	commc.pft	exs	2	Doubtful
43	commc.pft	exs	3	Reported
44	commc.pft	exs	5	Under Construction
45	commc.pft	exs	6	Abandoned/Disused
46	commc.pft	exs	7	Destroyed
47	commc.pft	exs	28	Operational
48	commc.pft	exs	601	Damaged
49	commc.pft	hgt	0	Unknown
50	commc.pft	nst	0	Unknown
51	commc.pft	nst	12	Radio
52	commc.pft	nst	15	TV
53	commc.pft	nst	16	Microwave
54	commc.pft	nst	33	Radio Telegraph
55	commc.pft	zv2	29999	Unknown
56	cxpipec.pft	len	0	Unknown
57	cxpipec.pft	loc	0	Unknown
58	cxpipec.pft	loc	4	Below Surface/Submerged/Underground
59	cxpipec.pft	loc	8	On Ground Surface
60	cxpipec.pft	loc	25	Suspended/Elevated above Ground or Water Surface
61	cxpipec.pft	wid	0	Unknown
62	utilnode.pft	exs	0	Unknown
63	utilnode.pft	exs	5	Under Construction
64	utilnode.pft	exs	6	Abandoned/Disused
65	utilnode.pft	exs	7	Destroyed
66	utilnode.pft	exs	28	Operational
67	utilnode.pft	exs	601	Damaged
68	utilnode.pft	hgt	0	Unknown
69	utilnode.pft	pro	0	Unknown
70	utilnode.pft	pro	38	Gas
71	utilnode.pft	pro	67	Oil
72	utilnode.pft	pro	116	Water
73	utilnode.pft	pro	999	Other
74	utilnode.pft	wid	0	Unknown
75	pipel.lft	acc	0	Unknown
76	pipel.lft	acc	1	Accurate
77	pipel.lft	acc	2	Approximate
78	pipel.lft	exs	0	Unknown
79	pipel.lft	exs	5	Under Construction
80	pipel.lft	exs	6	Abandoned/Disused
81	pipel.lft	exs	28	Operational
82	pipel.lft	exs	999	Other
83	pipel.lft	loc	0	Unknown
84	pipel.lft	loc	4	Below Surface/Submerged/Underground
85	pipel.lft	loc	8	On Ground Surface
86	pipel.lft	loc	25	Suspended/Elevated above Ground or Water Surface

TABLE E-304. Utilities Integer Value Description Table (Continued).

87	pipel.lft	ohd	0	Unknown
88	pipel.lft	ohd	1	> 1.5 and <= 5.0
89	pipel.lft	ohd	2	> 5.0 and <= 10.0
90	pipel.lft	ohd	3	> 10.0 and <= 20.0
91	pipel.lft	ohd	4	> 20.0 and <= 40.0
92	pipel.lft	ohd	5	> 40.0
93	pipel.lft	pfh	0	Unknown
94	pipel.lft	pro	0	Unknown
95	pipel.lft	pro	13	Chemical
96	pipel.lft	pro	38	Gas
97	pipel.lft	pro	39	Gasoline
98	pipel.lft	pro	67	Oil
99	pipel.lft	pro	116	Water
100	pipel.lft	pro	999	Other
101	powerl.lft	acc	0	Unknown
102	powerl.lft	acc	1	Accurate
103	powerl.lft	acc	2	Approximate
104	powerl.lft	exs	0	Unknown
105	powerl.lft	exs	5	Under Construction
106	powerl.lft	exs	6	Abandoned/Disused
107	powerl.lft	exs	7	Destroyed
108	powerl.lft	exs	28	Operational
109	powerl.lft	exs	601	Damaged
110	powerl.lft	tst	0	Unknown
111	powerl.lft	tst	1	Normal Suspension
112	powerl.lft	tst	2	Catenary (Over Mountains)
113	powerl.lft	tst	3	Catenary (Over Water)
114	powerl.lft	yht	0	Unknown
115	powerl.lft	yht	1	<= 0.5
116	powerl.lft	yht	2	> 0.5 and <= 1.0
117	powerl.lft	yht	3	> 1.0 and <= 1.5
118	powerl.lft	yht	4	> 1.5 and <= 2.0
119	powerl.lft	yht	5	> 2.0 and <= 5.0
120	powerl.lft	yht	6	> 5.0 and <= 10.0
121	powerl.lft	yht	7	> 10.0 and <= 20.0
122	powerl.lft	yht	8	> 20.0 and <= 35.0
123	powerl.lft	yht	9	> 35.0
124	telel.lft	exs	0	Unknown
125	telel.lft	exs	31	Isolated
126	telel.lft	exs	61	Not Isolated
127	comma.aft	exs	0	Unknown
128	comma.aft	exs	5	Under Construction
129	comma.aft	exs	6	Abandoned/Disused
130	comma.aft	exs	7	Destroyed
131	comma.aft	exs	28	Operational
132	comma.aft	exs	601	Damaged
133	comma.aft	hgt	0	Unknown
134	comma.aft	len	0	Unknown
135	comma.aft	nst	0	Unknown
136	comma.aft	nst	12	Radio
137	comma.aft	nst	13	Radio Telephone

TABLE E-304. Utilities Integer Value Description Table (Continued).

138	comma.aft	nst	15	TV
139	comma.aft	nst	16	Microwave
140	comma.aft	nst	33	Radio Telegraph
141	utilarea.aft	exs	0	Unknown
142	utilarea.aft	exs	5	Under Construction
143	utilarea.aft	exs	6	Abandoned/Disused
144	utilarea.aft	exs	7	Destroyed
145	utilarea.aft	exs	28	Operational
146	utilarea.aft	exs	601	Damaged
147	utilarea.aft	hgt	0	Unknown
148	utilarea.aft	ppc	0	Unknown
149	utilarea.aft	ppc	1	Hydro-electric
150	utilarea.aft	ppc	2	Nuclear
151	utilarea.aft	ppc	3	Solar
152	utilarea.aft	ppc	4	Thermal
153	utilarea.aft	ppc	6	Tidal
154	utilarea.aft	ppc	7	Internal Combustion
155	utilarea.aft	pro	0	Unknown
156	utilarea.aft	pro	13	Chemical
157	utilarea.aft	pro	38	Gas
158	utilarea.aft	pro	39	Gasoline
159	utilarea.aft	pro	67	Oil
160	utilarea.aft	pro	116	Water
161	utilarea.aft	pro	999	Other
162	utilarea.aft	wid	0	Unknown
163	utivoida.aft	vca	0	Unknown
164	utivoida.aft	vca	2	Area Too Rough to Collect
165	utivoida.aft	vca	3	No Available Imagery
166	utivoida.aft	vca	6	No Available Map Source
167	utivoida.aft	vca	7	No Suitable Imagery

E.3.15 Vegetation coverage. This coverage will have complete (contiguous) area coverage.

TABLE E-305. Content and format for Vegetation coverage feature class schema table.

Thematic Layer: Vegetation
Coverage Name: veg
Feature Table Description: Vegetation Feature Class Schema Table
Table Name: fcs
DQ Layer Number: 13

{Header length}L;
Vegetation Feature Class Schema Table;-;
id=I,1,P,Row Identifier,-,-,-,:
feature_class=T,8,N,Name of Feature Class,-,-,-,:
table1=T,12,N,First Table,-,-,-,:
table1_key=T,16,N,Column Name in First Table,-,-,-,:
table2=T,12,N,Second Table,-,-,-,:
table2_key=T,16,N,Column Name in Second Table,-,-,-,:;

1	barrena	barrena.aft	id	barrena.ajt	barrena.aft_id
2	barrena	barrena.ajt	fac_id	fac	id
3	barrena	fac	id	barrena.ajt	fac_id
4	barrena	barrena.ajt	barrena.aft_id	barrena.aft	id
5	cropa	cropa.aft	id	cropa.ajt	cropa.aft_id
6	cropa	cropa.ajt	fac_id	fac	id
7	cropa	fac	id	cropa.ajt	fac_id
8	cropa	cropa.ajt	cropa.aft_id	cropa.aft	id
9	grassa	grassa.aft	id	grassa.ajt	grassa.aft_id
10	grassa	grassa.ajt	fac_id	fac	id
11	grassa	fac	id	grassa.ajt	fac_id
12	grassa	grassa.ajt	grassa.aft_id	grassa.aft	id
13	treesa	treesa.aft	id	treesa.ajt	treesa.aft_id
14	treesa	treesa.ajt	fac_id	fac	id
15	treesa	fac	id	treesa.ajt	fac_id
16	treesa	treesa.ajt	treesa.aft_id	treesa.aft	id
17	vbuiltua	vbuiltua.aft	id	vbuiltua.ajt	vbuiltua.aft_id
18	vbuiltua	vbuiltua.ajt	fac_id	fac	id
19	vbuiltua	fac	id	vbuiltua.ajt	fac_id
20	vbuiltua	vbuiltua.ajt	vbuiltua.aft_id	vbuiltua.aft	id
21	vchanela	vchanela.aft	id	vchanela.ajt	vchanela.aft_id
22	vchanela	vchanela.ajt	fac_id	fac	id
23	vchanela	fac	id	vchanela.ajt	fac_id
24	vchanela	vchanela.ajt	vchanela.aft_id	vchanela.aft	id
25	vwatera	vwatera.aft	id	vwatera.ajt	vwatera.aft_id
26	vwatera	vwatera.ajt	fac_id	fac	id
27	vwatera	fac	id	vwatera.ajt	fac_id
28	vwatera	vwatera.ajt	vwatera.aft_id	vwatera.aft	id
29	vegvoida	vegvoida.aft	id	vegvoida.ajt	vegvoida.aft_id
30	vegvoida	vegvoida.ajt	fac_id	fac	id
31	vegvoida	fac	id	vegvoida.ajt	fac_id
32	vegvoida	vegvoida.ajt	vegvoida.aft_id	vegvoida.aft	id

TABLE E-306. Barren Area Join Table.

(This table is used to combine vegetation area features with their associated face primitives in a one-to-many relationship.)

```
{Header length}L;
Barren Area Join Table;-;
id=I,1,P,Row Identifier,-,-,-,:
barrena.aft_id=I,1,N,Feature Key,-,barrena.jti,-,:
tile_id=S,1,N,Tile Reference ID,-,tile1_id.jti,-,:
fac_id=I,1,N,Face Primitive ID,-,fac1_id.jti,-,:;
```

TABLE E-307. Barren Area Feature Table.

Thematic Layer: Vegetation
Coverage Name: veg
Feature Table Description: Barren Area Feature Table
Table Name: barrena.aft
DQ Layer Number: 13
Portrayal Criteria: For BJ110 and DA020 area >= 50,000 square meters.

```
{Header length}L;
Barren Area Feature Table;-;
id=I,1,P,Row Identifier,-,-,-,:
f_code=T,5,N,FACC Feature Code,char.vdt,f_code1.ati,-,:;
```

Column	Description	Value	Value Meaning	Applicable f_code for Each Attribute Value
id	Row Identifier	Sequential beginning with 1		
f_code	FACC Feature Code			
		BJ110	Tundra	
		DA020	Barren Ground	

TABLE E-308. Cropland Area Join Table.

(This table is used to combine vegetation area features with their associated face primitives in a one-to-many relationship.)

```
{Header length}L;
Cropland Area Join Table;-;
id=I,1,P,Row Identifier,-,-,-,:
cropa.aft_id=I,1,N,Feature Key,-,cropa.jti,-,:
tile_id=S,1,N,Tile Reference ID,-,tile2_id.jti,-,:
fac_id=I,1,N,Face Primitive ID,-,fac2_id.jti,-,:;
```

TABLE E-309. Cropland Area Feature Table.

Thematic Layer: Vegetation
Coverage Name: veg
Feature Table Description: Cropland Area Feature Table
Table Name: cropa.aft
DQ Layer Number: 13
Portrayal Criteria: For EA010 and EA050 area >= 50,000 square meters and continuous or area >= 15,625 and <50,000 square meters if isolated (surrounded by different f_code).

```
{Header length}L;
Cropland Area Feature Table;-;
id=I,1,P,Row Identifier,-,-,-,:
f_code=T,5,N,FACC Feature Code,char.vdt,f_code2.ati,-,:
ftc=S,1,N,Farming Type Category,int.vdt,-,-,:
veg=S,1,N,Vegetation Characteristic,int.vdt,-,-,:;
```

Column	Description	Value	Value Meaning	Applicable f_code for Each Attribute Value
id	Row Identifier	Sequential beginning with 1		
f_code	FACC Feature Code			
		EA010	Cropland	
		EA030	Nursery	
		EA050	Vineyards	
ftc	Farming Type Category			
		-32768	Null	EA030,EA050
		0	Unknown	EA010
		1	Shifting cultivation	EA010
		3	Terraced	EA010
		999	Other	EA010
veg	Vegetation Characteristic			
		-32768	Null	EA030,EA050
		0	Unknown	EA010
		1	Dry Crops	EA010
		4	Rice Paddies	EA010
		999	Other	EA010

TABLE E-310. Grassland Area Join Table.

(This table is used to combine vegetation area features with their associated face primitives in a one-to-many relationship.)

```
{Header length}L;
Grassland Area Join Table;-;
id=I,1,P,Row Identifier,-,-,-,:
grassa.aft_id=I,1,N,Feature Key,-,grassa.jti,-,:
tile_id=S,1,N,Tile Reference ID,-,tile3_id.jti,-,:
fac_id=I,1,N,Face Primitive ID,-,fac3_id.jti,-,:;
```

TABLE E-311. Grassland Area Feature Table.

Thematic Layer: Vegetation
Coverage Name: veg
Feature Table Description: Grassland Area Feature Table
Table Name: grassa.aft
DQ Layer Number: 13
Portrayal Criteria: For EB010, EB020, and EC010 area >= 50,000 square meters and continuous or area >= 15,625 and <50,000 square meters if isolated (surrounded by different f_code).

```
{Header length}L;
Grassland Area Feature Table;-;
id=I,1,P,Row Identifier,-,-,-,:
f_code=T,5,N,FACC Feature Code,char.vdt,f_code3.ati,-,:
bud=S,1,N,Brush/Undergrowth Density Code,int.vdt,-,-,:
veg=S,1,N,Vegetation Characteristic,int.vdt,-,-,:;
```

Column	Description	Value	Value Meaning	Applicable f_code for Each Attribute Value
id	Row Identifier	Sequential beginning with 1		
f_code	FACC Feature Code			
		EB010	Grassland	
		EB020	Scrub/Brush	
		EC010	Bamboo/Cane	
bud	Brush/Undergrowth Density Code			
		-32768	Null	EB010,EC010
		0	Unknown	EB020
		3	Medium (>15%<=50%)	EB020
		4	Dense (>50%)	EB020
veg	Vegetation Characteristic			
		-32768	Null	EC010,EB020
		0	Unknown	EB010
		8	Pasture, meadow, steppe	EB010
		9	Grassland with scattered trees	EB010

TABLE E-312. Trees Area Join Table.

(This table is used to combine vegetation area features with their associated face primitives in a one-to-many relationship.)

```
{Header length}L;
Trees Area Join Table;-;
id=I,1,P,Row Identifier,-,-,-,:
treesa.aft_id=I,1,N,Feature Key,-,treesa.jti,-,:
tile_id=S,1,N,Tile Reference ID,-,tile4_id.jti,-,:
fac_id=I,1,N,Face Primitive ID,-,fac4_id.jti,-,:;
```

TABLE E-313. Trees Area Feature Table.

Thematic Layer: Vegetation
Coverage Name: veg
Feature Table Description: Trees Area Feature Table
Table Name: treesa.aft
DQ Layer Number: 13
Portrayal Criteria: For EA040, BH095, and EC030 area >= 50,000 square meters and continuous or area >= 15,625 and <50,000 square meters if isolated (surrounded by different f_code).

```
{Header length}L;
Trees Area Feature Table;-;
id=I,1,P,Row Identifier,-,-,-,:
f_code=T,5,N,FACC Feature Code,char.vdt,f_code4.ati,-,:
bud=S,1,N,Brush/Undergrowth Density Code,int.vdt,-,-,:
pht=S,1,N,Predominant Height,int.vdt,-,-,:
sd1=S,1,N,Stem Diameter Size Range (1),int.vdt,-,-,:
sd2=S,1,N,Stem Diameter Size Range (2),int.vdt,-,-,:
str=S,1,N,Summer Tree Cover Density Code,int.vdt,-,-,:
ts1=S,1,N,Tree Spacing Range (1),int.vdt,-,-,:
ts2=S,1,N,Tree Spacing Range (2),int.vdt,-,-,:
veg=S,1,N,Vegetation Characteristic,int.vdt,-,-,:
vh3=S,1,N,Predominant Vegetation Height Range (3),int.vdt,-,-,:
wtr=S,1,N,Winter Tree Cover Density Code,int.vdt,-,-,:;
```

Column	Description	Value	Value Meaning	Applicable f_code for Each Attribute Value
id	Row Identifier	Sequential beginning with 1		
f_code	FACC Feature Code			
		BH095	Marsh/Swamp	
		EA040	Orchard/Plantation	
		EC030	Trees	
bud	Brush/Undergrowth	Density Code		
		0	Unknown	BH095,EA040,EC030
		3	Medium (>15%<=50%)	BH095,EA040,EC030
		4	Dense (>50%)	BH095,EA040,EC030

TABLE E-313. Trees Area Feature Table (Continued).

pht	Predominant Height [meters] [use only if VITD derived]			
		-32768	Null	BH095
		0	Unknown (default)	EA040,EC030
		1	0 to <= 2m	EA040,EC030
		4	> 2m to <= 5m	EA040,EC030
		8	> 5m to <= 10m	EA040,EC030
		12	> 10m to <= 15m	EA040,EC030
		18	> 15m to <= 20m	EA040,EC030
		22	> 20m to <= 25m	EA040,EC030
		28	> 25m to <= 30m	EA040,EC030
		32	> 30m to <= 35m	EA040,EC030
		38	> 35m	EA040,EC030
sd1	Stem Diameter Size Range (1) [centimeters]			
		-32768	Null	BH095
		0	Unknown	EA040,EC030
		1	> 0 and <= 5.00	EA040,EC030
		2	> 5.00 and <= 10.00	EA040,EC030
		3	> 10.00 and <= 20.00	EA040,EC030
		4	> 20.00 and <= 30.00	EA040,EC030
		5	> 30.00 and <= 40.00	EA040,EC030
		6	> 40.00 and <= 60.00	EA040,EC030
		7	> 60.00	EA040,EC030
sd2	Stem Diameter Size Range (2) [centimeters]			
		-32768	Null	BH095
		0	Unknown	EA040,EC030
		1	> 0 and <= 10.00	EA040,EC030
		2	> 10.00 and <= 30.00	EA040,EC030
		3	> 30.00 and <= 60.00	EA040,EC030
		4	> 60.00 and <= 100.00	EA040,EC030
		5	> 100.00	EA040,EC030
str	Summer Tree Cover Density Code			
		0	Unknown	BH095,EA040,EC030
		1	<= 25	BH095,EA040,EC030
		2	> 25 and <= 50	BH095,EA040,EC030
		3	> 50 and <= 75	BH095,EA040,EC030
		4	> 75	BH095,EA040,EC030
ts1	Tree Spacing Range (1) [decimeters]			
		-32768	Null	BH095
		0	Unknown	EA040,EC030
		1	> 0 and <= 10.00	EA040,EC030
		2	> 10.00 and <= 20.00	EA040,EC030
		3	> 20.00 and <= 30.00	EA040,EC030
		4	> 30.00 and <= 50.00	EA040,EC030
		5	> 50.00 and <= 70.00	EA040,EC030
		6	> 70.00 and <= 100.00	EA040,EC030
		7	> 100.00 and <= 150.00	EA040,EC030
		8	> 150.00	EA040,EC030

TABLE E-313. Trees Area Feature Table (Continued).

ts2	Tree Spacing Range (2)		[decimeters]	
		-32768	Null	BH095
		0	Unknown	EA040,EC030
		1	> 0 and <= 30.0	EA040,EC030
		2	> 30.0 and <= 70.0	EA040,EC030
		3	> 70.0 and <= 100.00	EA040,EC030
		4	> 100.00	EA040,EC030
veg	Vegetation Characteristic			
		0	Unknown	BH095,EA040,EC030
		16	Nipa Palm	BH095
		17	Palm	EA040
		19	Mangrove	BH095
		24	Deciduous	BH095,EA040,EC030
		25	Evergreen	BH095,EA040,EC030
		50	Mixed Trees	BH095,EA040,EC030
		52	Forest Clearing	EC030
		56	Without trees	BH095
vh3	Predominant Vegetation Height Range (3) [meters]			
		0	Unknown	BH095,EA040,EC030
		1	> 0 and <= 5	BH095,EA040,EC030
		2	> 5 and <= 10	BH095,EA040,EC030
		3	> 10 and <= 20	BH095,EA040,EC030
		4	> 20 and <= 40	BH095,EA040,EC030
		5	> 40	BH095,EA040,EC030
		6	Not Applicable	BH095,EA040,EC030
	(for BH095 use only if swamp - contains trees, if veg=56 use NA)			
wtr	Winter Tree Cover Density Code			
		0	Unknown	BH095,EA040,EC030
		1	<= 25	BH095,EA040,EC030
		2	> 25 and <= 50	BH095,EA040,EC030
		3	> 50 and <= 75	BH095,EA040,EC030
		4	> 75	BH095,EA040,EC030

TABLE E-314. Built-Up Area Join Table.

(This table is used to combine vegetation areas with their associated face primitives in a one-to-many relationship.)

```
{Header length}L;
Built-Up Area Join Table;-;
id=I,1,P,Row Identifier,-,-,-,:
vbuiltua.aft_id=I,1,N,Feature Key,-,vbuiltua.jti,-,:
tile_id=S,1,N,Tile Reference ID,-,tile5_id.jti,-,:
fac_id=I,1,N,Face Primitive ID,-,fac5_id.jti,-,:;
```

TABLE E-315. Built-Up Area Feature Table.

Thematic Layer: Vegetation
Coverage Name: veg
Feature Table Description: Built-Up Area Feature Table
Table Name: vbuiltua.aft
DQ Layer Number: 13
Portrayal Criteria: For AL020, AL105, and AL135 area >= 15,625 square meters.

```
{Header length}L;
Built-Up Area Feature Table;-;
id=I,1,P,Row Identifier,-,-,-,:
f_code=T,5,N,FACC Feature Code,char.vdt,f_code5.ati,-,:
ppt=S,1,N,Populated Place Type,int.vdt,-,-,:;
```

Column	Description	Value	Value Meaning	Applicable f_code for Each Attribute Value
id	Row Identifier	Sequential beginning with 1		
f_code	FACC Feature Code			
		AL020	Built-Up Area	
		AL105	Settlement	
		AL135	Native Settlement	
ppt	Populated Place Type			
		-32768	Null	AL020,AL135
		0	Unknown	AL105
		2	Shantytown	AL105

TABLE E-316. Channel Area Join Table.

(This table is used to combine vegetation area features with their associated face primitives in a one-to-many relationship.)

```
{Header length}L;
Channel Area Join Table;-;
id=I,1,P,Row Identifier,-,-,-,:
vchanela.aft_id=I,1,N,Feature Key,-,vchanela.jti,-,:
tile_id=S,1,N,Tile Reference ID,-,tile6_id.jti,-,:
fac_id=I,1,N,Face Primitive ID,-,fac6_id.jti,-,:;
```

TABLE E-317. Channel Area Feature Table.

Thematic Layer: Vegetation
Coverage Name: veg
Feature Table Description: Channel Area Feature Table
Table Name: vchanela.aft
DQ Layer Number: 13
Portrayal Criteria: For BH020 and BH140 must be perennial and water width >= 25 meters as well as BH030.

```
{Header length}L;
Channel Area Feature Table;-;
id=I,1,P,Row Identifier,-,-,-,:
f_code=T,5,N,FACC Feature Code,char.vdt,f_code6.ati,-,:;
```

Column	**Description**	**Value**	**Value Meaning**	**Applicable f_code for Each Attribute Value**
id	Row Identifier	Sequential beginning with 1		
f_code	FACC Feature Code			
		BH020	Canal	
		BH030	Ditch	
		BH140	River/Stream	

TABLE E-318. Water Area Join Table.

(This table is used to combine vegetation area features with their associated face primitives in a one-to-many relationship.)

```
{Header length}L;
Water Area Join Table;-;
id=I,1,P,Row Identifier,-,-,-,:
vwatera.aft_id=I,1,N,Feature Key,-,vwatera.jti,-,:
tile_id=S,1,N,Tile Reference ID,-,tile7_id.jti,-,:
fac_id=I,1,N,Face Primitive ID,-,fac7_id.jti,-,:;
```

TABLE E-319. Water Area Feature Table.

Thematic Layer: Vegetation
Coverage Name: veg
Feature Table Description: Water Area Feature Table
Table Name: vwatera.aft
DQ Layer Number: 13
Portrayal Criteria: For AC030, BA040, and BH155 area >= 15,625 square meters, for BH040 and BH050 area >= 5,625 square meters, and for BH080 and BH130 are perennial, and area >=2,500 square meters.

```
{Header length}L;
Water Area Feature Table;-;
id=I,1,P,Row Identifier,-,-,-,:
f_code=T,5,N,FACC Feature Code,char.vdt,f_code7.ati,-,:;
```

Column	Description	Value	Value Meaning	Applicable f_code for Each Attribute Value
id	Row Identifier	Sequential beginning with 1		
f_code	FACC Feature Code			
		AC030	Settling Basin/Sludge Pond	
		BA040	Water (Except Inland)	
		BH040	Filtration Beds/Aeration Beds	
		BH050	Fish Hatchery/Fish Farm/Marine Farm	
		BH080	Lake/Pond	
		BH130	Reservoir	
		BH155	Salt Evaporator	

TABLE E-320. Vegetation Void Collection Area Join Table.
(This table is used to combine area features with their associated face primitives in a one-to-many relationship.)

```
{Header length}L;
Vegetation Void Collection Area Join Table;-;
id=I,1,P,Row Identifier,-,-,-,:
vegvoida.aft_id=I,1,N,Feature Key,-,vegvoida.jti,-,:
tile_id=S,1,N,Tile Reference ID,-,tile8_id.jti,-,:
fac_id=I,1,N,Face Primitive ID,-,fac8_id.jti,-,:;
```

TABLE E-321. Vegetation Void Collection Area Feature Table.

Thematic Layer:	Vegetation
Coverage Name:	veg
Feature Table Description:	Vegetation Void Collection Area Feature Table
Table Name:	vegvoida.aft
DQ Layer Number:	13
Portrayal Criteria:	For ZD020 area >= 15,625 square meters.

```
{Header length}L;
Vegetation Void Collection Area Feature Table;-;
id=I,1,P,Row Identifier,-,-,-,:
f_code=T,5,N,FACC Feature Code,char.vdt,-,-,:
vca=S,1,N,Void Collection Attribute,int.vdt,-,-,:;
```

Column	Description	Value	Value Meaning	Applicable f_code for Each Attribute Value
id	Row Identifier	Sequential beginning with 1		
f_code	FACC Feature Code			
		ZD020	Void Collection Area	
vca	Void Collection Attribute			
		0	Unknown	ZD020
		2	Area Too Rough to Collect	ZD020
		3	No Available Imagery	ZD020
		6	No Available Map Source	ZD020
		7	No Suitable Imagery	ZD020

TABLE E-322. Vegetation Feature Class Attribute Table.

Thematic Layer: Vegetation
Coverage Name: veg
Table Description: Vegetation Feature Class Attribute Table
Table Name: fca
DQ Layer Number: 13

```
{Header length}L;
Vegetation Feature Class Attribute Table;-;
id=I,1,P,Row Identifier,-,-,-,:
fclass=T,8,U,Feature Class Name,-,-,-,:
type=T,1,N,Feature Type,char.vdt,-,-,:
descr=T,*,N,Description,-,-,-,:;
```

Column	Description	Value	Value Meaning	Applicable Feature Class for Each Attribute Value
id	Row Identifier	Sequential beginning with 1		
fclass	Feature Class Name			
		barrena		
		cropa		
		grassa		
		treesa		
		vbuiltua		
		vchanela		
		vwatera		
		vegvoida		
type	Feature Type			
		A	Area Feature	barrena, cropa, grassa, treesa, vbuiltua, vchanela, vwatera, vegvoida
descr	Description			
		Barren		barrena
		Croplands		cropa
		Grasslands		grassa
		Trees		treesa
		Built-up area		vbuiltua
		Water Channels		vchanela
		Water		vwatera
		Vegetation Void Collection Area		vegvoida

TABLE E-323. Vegetation Character Value Description Table.

Thematic Layer: Vegetation
Coverage Name: veg
Feature Table Description: Vegetation Character Value Description Table
Table Name: char.vdt
DQ Layer Number: 13

```
{Header length}L;
Vegetation Character Value Description Table;-;
id=I,1,P,Row Identifier,-,-,-,:
table=T,12,N,Name of the Feature Table,-,-,-,:
attribute=T,6,N,Column Name,-,-,-,:
value=T,5,N,Unique Value of Attribute,-,-,-,:
description=T,*,N,Description of Value,-,-,-,:;
```

1	barrena.aft	f_code	BJ110	Tundra
2	barrena.aft	f_code	DA020	Barren Ground
3	cropa.aft	f_code	EA010	Cropland
4	cropa.aft	f_code	EA030	Nursery
5	cropa.aft	f_code	EA050	Vineyards
6	grassa.aft	f_code	EB010	Grassland
7	grassa.aft	f_code	EB020	Scrub/Brush
8	grassa.aft	f_code	EC010	Bamboo/Cane
9	treesa.aft	f_code	BH095	Marsh/Swamp
10	treesa.aft	f_code	EA040	Orchard/Plantation
11	treesa.aft	f_code	EC030	Trees
12	vbuiltua.aft	f_code	AL020	Built-Up Area
13	vbuiltua.aft	f_code	AL105	Settlement
14	vbuiltua.aft	f_code	AL135	Native Settlement
15	vchanela.aft	f_code	BH020	Canal
16	vchanela.aft	f_code	BH030	Ditch
17	vchanela.aft	f_code	BH140	River/Stream
18	vwatera.aft	f_code	AC030	Settling Basin/Sludge Pond
19	vwatera.aft	f_code	BA040	Water (Except Inland)
20	vwatera.aft	f_code	BH040	Filtration Beds/Aeration Beds
21	vwatera.aft	f_code	BH050	Fish Hatchery/Fish Farm/Marine Farm
22	vwatera.aft	f_code	BH080	Lake/Pond
23	vwatera.aft	f_code	BH130	Reservoir
24	vwatera.aft	f_code	BH155	Salt Evaporator
25	vegvoida.aft	f_code	ZD020	Void Collection Area
26	fca	type	A	Area Feature

E.3.15.1 Vegetation coverage glossary.

AC030 Settling Basin/Sludge Pond (A) A site where solid matter is precipitated from a liquid by evaporating or settling.

AL020 Built-Up Area (A) An area containing a concentration of buildings and other structures.

AL105 Settlement (A) A concentration of small dwellings.
PPT Populated Place Type (A) The type of populated place.

AL135 Native Settlement (A) A concentration of native dwellings, generally of the hut type, which are not usually of substantial construction.

BA040 Water (Except Inland) (A) An area of water which normally has tidal fluctuations.

BH020 Canal (A) A manmade or improved natural waterway used for transportation.

BH030 Ditch (A) A channel constructed for the purpose of irrigation or drainage.

BH040 Filtration Beds/Aeration Beds (A) An area containing layers of material used to filter or aerate water.

BH050 Fish Hatchery/Fish Farm/Marine Farm (A) An enclosure of water for the breeding and/or rearing of fish.

BH080 Lake/Pond (A) A body of water surrounded by land. (See also BH130)

BH095 Marsh/Swamp (A) A saturated area at times covered with water, supporting vegetation which may include trees. (See also BH090)
BUD Brush/Undergrowth Density Code (A) Density of brush or undergrowth.
STR Summer Tree Cover Density Code (A) Coded value indicating percent of summer canopy closure within delineated area of feature.
VEG Vegetation Characteristic (A) Type of Plant or Plantings.
WTR Winter Tree Cover Density Code (A) Coded value indicating percent of winter canopy closure within delineated area of future.
VH3 Predominant Vegetation Height Range (3) (A) Range of predominant height (in meters) of vegetation within delineated area of feature (Third Range).

BH130 Reservoir (A) A man-made open enclosure or area formed for the storage of water. (See also BH080)

BH140 River/Stream (A) A natural flowing watercourse

BH155 Salt Evaporator (A) Shallow Pools, normally man made, used for natural evaporation of water for the collection of salt.

BJ110 Tundra (A) A prairie-like region in the Arctic and Subarctic zones which sustains a growth of low vegetation.

DA020 Barren Ground (A) Ground so disturbed as to have no identifiable coverage.

EA010 Cropland (A) An area that has been tilled for planting of crops. (See also EA040, EA050, and EA055)
FTC Farming Type Category (A) Type of field pattern.
VEG Vegetation Characteristic (A) Type of plant or plantings.

EA030 Nursery (A) A place where shrubs, flowers, plants and trees are grown for transplanting, seed or grafting.

EA040 Orchard/Plantation (A) An area covered by systematic plantings of trees which yield fruits, nuts or other products. (See also EA010, EA050, and EA055)
BUD Brush/Undergrowth Density Code (A) Density of brush or undergrowth.
PHT Predominant Height (A) Height of 51% or more of the feature. If not obtainable, then the average height of the feature will be used.
SD1 Stem Diameter Size Range (1) (A) Estimated range (2) of the average stem diameter within area of feature, determined in centimeters at a distance of 1.4 meters above the ground.
SD2 Stem Diameter Size Range (2) (A) Estimated range (2) of the average stem diameter within area of feature, determined in centimeters at a distance of 1.4 meters above the ground.
STR Summer Tree Cover Density Code (A) Coded value indicating percent of summer canopy closure within delineated area of feature.
TS1 Tree Spacing Range (1) (A) Estimated range (2) of the average distance between trees in a stand, determined in decimeters from center to center of adjacent trees.
TS2 Tree Spacing Range (2) (A) Estimated range (2) of the average distance between trees in a stand, determined in decimeters from center to center of adjacent trees.
VEG Vegetation Characteristic (A) Type of plant or plantings.
VH3 Predominant Vegetation Height Range (3) (A) Range of predominant height (in meters) of vegetation within delineated area of feature (Third Range).
WTR Winter Tree Cover Density Code (A) Coded value indicating percent of winter canopy closure within delineated area of future.

EA050 Vineyards (A) An area covered by systematic planting of grape vines. (See also EA010, EA040)

EB010 Grassland (A) Area composed of uncultured plants which have little or no woody tissue.
VEG Vegetation Characteristic (A) Type of plant or plantings.

EB020 Scrub/Brush (A) Low-growing woody plant. (See also EC030)
BUD Brush/Undergrowth Density Code (A) Density of brush or undergrowth.

EC010 Bamboo/Cane (A) Woody, treelike grass.

EC030 Trees (A) Woody-perennial plants, having a self-supporting main stem or trunk. (See also EA040)
BUD Brush/Undergrowth Density Code (A) Density of brush or undergrowth.

PHT Predominant Height (A) Height of 51% or more of the feature. If not obtainable, then the average height of the feature will be used.
SD1 Stem Diameter Size Range (1) (A) Estimated range (2) of the average stem diameter within area of feature, determined in centimeters at a distance of 1.4 meters above the ground.
SD2 Stem Diameter Size Range (2) (A) Estimated range (2) of the average stem diameter within area of feature, determined in centimeters at a distance of 1.4 meters above the ground.
STR Summer Tree Cover Density Code (A) Coded value indicating percent of summer canopy closure within delineated area of feature.

EC030 Trees (Continued)

TS1 Tree Spacing Range (1) (A) Estimated range (2) of the average distance between trees in a stand, determined in decimeters from center to center of adjacent trees.

TS2 Tree Spacing Range (2) (A) Estimated range (2) of the average distance between trees in a stand, determined in decimeters from center to center of adjacent trees.
VEG Vegetation Characteristic (A) Type of Plant or Plantings.
VH3 Predominant Vegetation Height Range (3) (A) Range of predominant height (in meters) of vegetation within delineated area of feature (Third Range).
WTR Winter Tree Cover Density Code (A) Coded value indicating percent of winter canopy closure within delineated area of future.

ZD020 Void Collection Area (A) An area lacking suitable source coverage, or where data is not required.
VCA Void Collection Attribute (A) Reason data is not collected.

TABLE E-324. Vegetation Integer Value Description Table.

Thematic Layer: Vegetation
Coverage Name: veg
Feature Table Description: Vegetation Integer Value Description Table
Table Name: int.vdt
DQ Layer Number: 13

{Header length}L;
Vegetation Integer Value Description Table;-;
id=I,1,P,Row Identifier,-,-,-,:
table=T,12,N,Name of the Feature Table,-,-,-,:
attribute=T,3,N,Column Name,-,-,-,:
value=S,1,N,Unique Value of Attribute,-,-,-,:
description=T,*,N,Description of Value,-,-,-,:;

1	cropa.aft	ftc	0	Unknown
2	cropa.aft	ftc	1	Shifting cultivation
3	cropa.aft	ftc	3	Terraced
4	cropa.aft	ftc	999	Other
5	cropa.aft	veg	0	Unknown
6	cropa.aft	veg	1	Dry Crops
7	cropa.aft	veg	4	Rice Paddies
8	cropa.aft	veg	999	Other
9	grassa.aft	bud	0	Unknown
10	grassa.aft	bud	3	Medium (>15%<=50%)
11	grassa.aft	bud	4	Dense (>50%)
12	grassa.aft	veg	0	Unknown
13	grassa.aft	veg	8	Pasture, meadow, steppe
14	grassa.aft	veg	9	Grassland with scattered trees
15	treesa.aft	bud	0	Unknown
16	treesa.aft	bud	3	Medium (>15%<=50%)
17	treesa.aft	bud	4	Dense (>50%)
18	treesa.aft	pht	0	Unknown
19	treesa.aft	pht	1	0 to <=2m
20	treesa.aft	pht	4	>2m to <=5m
21	treesa.aft	pht	8	>5m to <=10m
22	treesa.aft	pht	12	>10m to <=15m
23	treesa.aft	pht	18	>15m to <=20m
24	treesa.aft	pht	22	>20m to <=25m
25	treesa.aft	pht	28	>25m to <=30m
26	treesa.aft	pht	32	>30m to <=35m
27	treesa.aft	pht	38	>35m
28	treesa.aft	sd1	0	Unknown
29	treesa.aft	sd1	1	> 0 and <= 5.00
30	treesa.aft	sd1	2	> 5.00 and <= 10.00
31	treesa.aft	sd1	3	> 10.00 and <= 20.00
32	treesa.aft	sd1	4	> 20.00 and <= 30.00
33	treesa.aft	sd1	5	> 30.00 and <= 40.00
34	treesa.aft	sd1	6	> 40.00 and <= 60.00
35	treesa.aft	sd1	7	> 60.00
36	treesa.aft	sd2	0	Unknown
37	treesa.aft	sd2	1	> 0 and <= 10.00
38	treesa.aft	sd2	2	> 10.00 and <= 30.00

TABLE E-324. Vegetation Integer Value Description Table (Continued).

39	treesa.aft	sd2	3	> 30.00 and <= 60.00
40	treesa.aft	sd2	4	> 60.00 and <= 100.00
41	treesa.aft	sd2	5	> 100.00
42	treesa.aft	str	0	Unknown
43	treesa.aft	str	1	<= 25
44	treesa.aft	str	2	> 25 and <= 50
45	treesa.aft	str	3	> 50 and <= 75
46	treesa.aft	str	4	> 75
47	treesa.aft	ts1	0	Unknown
48	treesa.aft	ts1	1	> 0 and <= 10.00
49	treesa.aft	ts1	2	> 10.00 and <= 20.00
50	treesa.aft	ts1	3	> 20.00 and <= 30.00
51	treesa.aft	ts1	4	> 30.00 and <= 50.00
52	treesa.aft	ts1	5	> 50.00 and <= 70.00
53	treesa.aft	ts1	6	> 70.00 and <= 100.00
54	treesa.aft	ts1	7	> 100.0 and <= 150.00
55	treesa.aft	ts1	8	> 150.00
56	treesa.aft	ts2	0	Unknown
57	treesa.aft	ts2	1	> 0 and <= 30.0
58	treesa.aft	ts2	2	> 30.0 and <= 70.0
59	treesa.aft	ts2	3	> 70.0 and <= 100.00
60	treesa.aft	ts2	4	> 100.00
61	treesa.aft	veg	0	Unknown
62	treesa.aft	veg	16	Nipa Palm
63	treesa.aft	veg	17	Palm
64	treesa.aft	veg	19	Mangrove
65	treesa.aft	veg	24	Deciduous
66	treesa.aft	veg	25	Evergreen
67	treesa.aft	veg	50	Mixed Trees
68	treesa.aft	veg	52	Forest Clearing
69	treesa.aft	veg	56	Without trees
70	treesa.aft	vh3	0	Unknown
71	treesa.aft	vh3	1	> 0 and <= 5
72	treesa.aft	vh3	2	> 5 and <= 10
73	treesa.aft	vh3	3	> 10 and <= 20
74	treesa.aft	vh3	4	> 20 and <= 40
75	treesa.aft	vh3	5	> 40
76	treesa.aft	vh3	6	Not Applicable
77	treesa.aft	wtr	0	Unknown
78	treesa.aft	wtr	1	<= 25
79	treesa.aft	wtr	2	> 25 and <= 50
80	treesa.aft	wtr	3	> 50 and <= 75
81	treesa.aft	wtr	4	> 75
82	vbuiltua.aft	ppt	0	Unknown
83	vbuiltua.aft	ppt	2	Shantytown
84	vegvoida.aft	vca	0	Unknown
85	vegvoida.aft	vca	2	Area Too Rough to Collect
86	vegvoida.aft	vca	3	No Available Imagery
87	vegvoida.aft	vca	6	No Available Map Source
88	vegvoida.aft	vca	7	No Suitable Imagery

DTOP FEATURES

F.1 SCOPE

F.1.1 Scope. This appendix provides information on the feature and attribute organization of the data dictionary for the DTOP product. It is a mandatory part of this specification. The information contained herein is intended for compliance.

F.2 APPLICABLE DOCUMENTS

This section is not applicable to this appendix.

F.3 DTOP Features.

F.3.1 FACC feature code by coverage and feature types. Table F-1 contains all valid FACC codes and their primitive types for each coverage. Please note that some these codes are no longer in compliance with the newer releases of DIGEST, Part 4, FACC, Edition 2.0, June 1997

TABLE F-1. DTOP codes by coverage and feature type.

Layer	FACC Code	Feature Name	END	CND	EDG	FAC	TXT
BCH	BA060	Beach Zone				X	
BND	AL025	Cairn	X				
BND	BA010	Coastline/Shoreline			X		
BND	CA030	Spot Elevation	X				
BND	EC020	Oasis	X			X	
BND	FA000	Administrative Boundary			X		
BND	FA020	Armistice Line			X		
BND	FA030	Cease-Fire Line			X		
BND	FA060	Defacto Boundary			X		
BND	FA070	Demilitarized Zone				X	
BND	FA110	International Date Line			X		
BND	FA170	Zone of Occupation				X	
BND	ZB030	Boundary Monument	X	X			
BND	ZB035	Control Point/Control Station	X	X			
BND	ZD020	Void Collection Area				X	
BND	ZD040	Named Location					X
BND	ZD045	Text Description					X
DQ	ZD020	Void Collection Area				X	
DQ	ZD045	Text Description					X
HYDRO	AA050	Well	X				
HYDRO	BA020	Foreshore				X	
HYDRO	BB040	Breakwater/Groyne			X	X	
HYDRO	BB140	Jetty			X	X	
HYDRO	BB230	Seawall			X		
HYDRO	BD100	Pile/Piling/Post	X			X	
HYDRO	BD120	Reef			X	X	
HYDRO	BD130	Rock	X				
HYDRO	BD180	Wreck	X				

TABLE F-1. DTOP codes by coverage and feature type (Continued).

Layer	FACC Code	Feature Name	END	CND	EDG	FAC	TXT
HYDRO	ZD020	Void Collection Area				X	
HYDRO	ZD040	Named Location					X
HYDRO	ZD045	Text Description					X
IND	AA010	Mine	X			X	
IND	AA012	Quarry	X			X	
IND	AA040	Rig/Superstructure	X				
IND	AA050	Well	X				
IND	AB000	Disposal Site/Waste Pile				X	
IND	AB010	Wrecking Yard/Scrap Yard				X	
IND	AC000	Processing Plant/Treatment Plant	X			X	
IND	AC020	Catalytic Cracker	X				
IND	AF010	Chimney/Smokestack	X				
IND	AF020	Conveyor			X		
IND	AF030	Cooling Tower	X				
IND	AF040	Crane	X				
IND	AF070	Flare Pipe	X				
IND	AJ030	Feedlot/Stockyard/Holding Pen				X	
IND	AJ050	Windmill	X				
IND	AL140	Particle Accelerator				X	
IND	AL240	Tower (Non-communication)	X				
IND	AM010	Depot (Storage)				X	
IND	AM020	Grain Bin/Silo	X			X	
IND	AM030	Grain Elevator	X			X	
IND	AM060	Storage Bunker/Storage Mound	X			X	
IND	AM070	Tank	X			X	
IND	AM080	Water Tower	X				
IND	BH060	Flume			X		
IND	BI010	Cistern	X				
IND	FA090	Geophysical Prospecting Grid			X		
IND	ZD020	Void Collection Area				X	
IND	ZD040	Named Location					X
IND	ZD045	Text Description					X
OBS	AL060	Dragon teeth			X	X	
OBS	AL070	Fence			X		
OBS	AL260	Wall			X		
OBS	BH100	Moat			X		
OBS	DB010	Bluff/Cliff/Escarpment			X		
OBS	DB070	Cut			X		
OBS	DB080	Depression			X		
OBS	DB090	Embankment/Fill			X		
OBS	DB145	Miscellaneous Obstacle			X	X	
OBS	DB190	Volcanic Dike			X		
OBS	EA020	Hedgerow			X		
OBS	ZD020	Void Collection Area				X	

TABLE F-1. DTOP codes by coverage and feature type (Continued).

Layer	FACC Code	Feature Name	END	CND	EDG	FAC	TXT
PHYS	BH150	Salt Pan				X	
PHYS	BH160	Sebhka				X	
PHYS	BJ020	Moraine				X	
PHYS	BJ030	Glacier				X	
PHYS	BJ040	Ice Cliff			X		
PHYS	BJ060	Ice Peak/Nunatak	X				
PHYS	BJ065	Ice Shelf				X	
PHYS	BJ070	Pack Ice				X	
PHYS	BJ080	Polar Ice				X	
PHYS	BJ100	Snow Field/Ice Field				X	
PHYS	DA005	Asphalt Lake				X	
PHYS	DB030	Cave	X				
PHYS	DB060	Crevice/Crevasse			X	X	
PHYS	DB100	Esker			X		
PHYS	DB110	Fault			X		
PHYS	DB115	Geothermal Feature	X				
PHYS	DB160	Rock Strata/Rock Formation	X			X	
PHYS	DB170	Sand Dune/Sand Hills				X	
PHYS	DB180	Volcano	X				
PHYS	ZD020	Void Collection Area				X	
PHYS	ZD040	Named Location					X
PHYS	ZD045	Text Description					X
POP	AH050	Fortification	X			X	
POP	AI020	Mobile Home/Mobile Home Park				X	
POP	AK020	Amusement Park Attraction	X				
POP	AK030	Amusement Park				X	
POP	AK040	Athletic Field				X	
POP	AK060	Campground/Campsite				X	
POP	AK090	Fairgrounds				X	
POP	AK100	Golf Course				X	
POP	AK120	Park				X	
POP	AK130	Race Track			X		
POP	AK160	Stadium/Amphitheater				X	
POP	AK170	Swimming Pool				X	
POP	AK180	Zoo/Safari Park				X	
POP	AL015	Building	X		X	X	
POP	AL020	Built-Up Area				X	
POP	AL030	Cemetery	X			X	
POP	AL100	Hut	X				
POP	AL105	Settlement				X	
POP	AL130	Monument	X				
POP	AL135	Native Settlement				X	
POP	AL170	Plaza/City Square				X	
POP	AL200	Ruins	X			X	
POP	AL250	Underground Dwelling	X				
POP	ZD020	Void Collection Area				X	

TABLE F-1. DTOP codes by coverage and feature type (Continued).

Layer	FACC Code	Feature Name	END	CND	EDG	FAC	TXT
POP	ZD040	Named Location					X
POP	ZD045	Text Description					X
SDR	AC030	Settling Basin/Sludge Pond				X	
SDR	AQ111	Prepared Raft/Float Bridge		X			
SDR	BA030	Island				X	
SDR	BA040	Water (Except Inland)				X	
SDR	BH010	Aqueduct			X		
SDR	BH020	Canal			X	X	
SDR	BH030	Ditch			X	X	
SDR	BH040	Filtration Beds/Aeration Beds				X	
SDR	BH050	Fish Hatchery/Fish Farm/Marine Farm				X	
SDR	BH070	Ford		X	X		
SDR	BH080	Lake/Pond				X	
SDR	BH090	Land Subject to Inundation				X	
SDR	BH110	Penstock			X		
SDR	BH120	Rapids		X	X		
SDR	BH130	Reservoir				X	
SDR	BH140	River/Stream			X	X	
SDR	BH145	River Stream Vanishing Point		X			
SDR	BH155	Salt Evaporator				X	
SDR	BH170	Spring/Water-Hole	X	X			
SDR	BH180	Waterfall		X	X		
SDR	BH200	Miscellaneous Surface Drainage Feature			X	X	
SDR	BI020	Dam/Weir	X	X	X	X	
SDR	BI030	Lock	X	X		X	
SDR	BI040	Sluice Gate		X	X		
SDR	BI050	Water Intake Tower	X			X	
SDR	ZD020	Void Collection Area				X	
SDR	ZD040	Named Location					X
SDR	ZD045	Text Description					X
SLP	AC030	Settling Basin/Sludge Pond				X	
SLP	BA040	Water (Except Inland)				X	
SLP	BH020	Canal				X	
SLP	BH030	Ditch				X	
SLP	BH040	Filtration Beds/Aeration Beds				X	
SLP	BH050	Fish Hatchery/Fish Farm/Marine Farm				X	
SLP	BH080	Lake/Pond				X	
SLP	BH130	Reservoir				X	
SLP	BH140	River/Stream				X	
SLP	BH155	Salt Evaporator				X	
SLP	SA050	Slope Polygon				X	
SLP	ZD020	Void Collection Area				X	

TABLE F-1. DTOP codes by coverage and feature type (Continued).

Layer	FACC Code	Feature Name	END	CND	EDG	FAC	TXT
SMC	AC030	Settling Basin/Sludge Pond				X	
SMC	AL020	Built-Up Area				X	
SMC	AL135	Native Settlement				X	
SMC	BA040	Water (Except Inland)				X	
SMC	BH020	Canal				X	
SMC	BH030	Ditch				X	
SMC	BH040	Filtration Beds/Aeration Beds				X	
SMC	BH050	Fish Hatchery/Fish Farm/Marine Farm				X	
SMC	BH080	Lake/Pond				X	
SMC	BH130	Reservoir				X	
SMC	BH140	River/Stream				X	
SMC	BH155	Salt Evaporator				X	
SMC	BJ100	Snow Field/Ice Field				X	
SMC	DA010	Ground Surface Element				X	
SMC	ZD020	Void Collection Area				X	
TRANS	AL075	Gallery		X	X		
TRANS	AL155	Overhead Obstruction Location		X	X		
TRANS	AL210	Snow Shed/Rock Shed		X	X		
TRANS	AN010	Railroad			X		
TRANS	AN050	Railroad Siding/Railroad Spur			X		
TRANS	AN060	Railroad Yard/Marshalling Yard				X	
TRANS	AN075	Railroad Turntable		X			
TRANS	AP010	Cart Track			X		
TRANS	AP020	Interchange			X		
TRANS	AP030	Road			X		
TRANS	AP050	Trail			X		
TRANS	AQ010	Aerial Cableway Lines/Ski Lift Lines			X		
TRANS	AQ040	Bridge/Overpass/Viaduct		X	X		
TRANS	AQ045	Bridge Span		X			
TRANS	AQ058	Constricton/Expansion [drop gate-TUC]		X			
TRANS	AQ060	Control Tower	X				
TRANS	AQ065	Culvert		X			
TRANS	AQ070	Ferry Crossing		X	X		
TRANS	AQ110	Mooring Mast	X				
TRANS	AQ118	Sharp Curve		X			
TRANS	AQ120	Steep Grade		X			
TRANS	AQ130	Tunnel		X	X		
TRANS	AQ135	Vehicle Stopping Area/Rest Area				X	
TRANS	AQ140	Vehicle Storage/Vehicle Parking				X	
TRANS	BB010	Anchorage	X			X	
TRANS	BB090	Drydock				X	
TRANS	BB190	Pier/Wharf/Quay			X	X	
TRANS	BB220	Ramp(Maritime)			X	X	

TABLE F-1. DTOP codes by coverage and feature type (Continued).

Layer	FACC Code	Feature Name	END	CND	EDG	FAC	TXT
TRANS	BH070	Ford		X	X		
TRANS	DB150	Mountain Pass		X			
TRANS	GB005	Airport/Airfield [a/c fac.]	X			X	
TRANS	GB010	Airport Lighting	X				
TRANS	GB015	Apron/Hardstand				X	
TRANS	GB030	Helicopter Landing Pad [landing pad]	X				
TRANS	GB045	Overrun/Stopway				X	
TRANS	GB055	Runway				X	
TRANS	GB075	Taxiway				X	
TRANS	ZD020	Void Collection Area				X	
TRANS	ZD040	Named Location					X
TRANS	ZD045	Text Description					X
UTIL	AD010	Power Plant				X	
UTIL	AD020	Solar Panels	X				
UTIL	AD030	Substation/Transformer Yard	X	X		X	
UTIL	AL195	Ramp [pipeline x-pt]		X			
UTIL	AQ113	Pipeline/Pipe			X		
UTIL	AQ116	Pumping Station	X	X		X	
UTIL	AT010	Disk/Dish	X				
UTIL	AT030	Power Transmission Line			X		
UTIL	AT050	Communication Building	X			X	
UTIL	AT060	Telephone Line/Telegraph Line			X		
UTIL	AT080	Communication Tower	X	X			
UTIL	ZD020	Void Collection Area				X	
UTIL	ZD040	Named Location					X
UTIL	ZD045	Text Description					X
VEG	AC030	Settling Basin/Sludge Pond				X	
VEG	AL020	Built-Up Area				X	
VEG	AL105	Settlement				X	
VEG	AL135	Native Settlement				X	
VEG	BA040	Water (Except Inland)				X	
VEG	BH020	Canal				X	
VEG	BH030	Ditch				X	
VEG	BH040	Filtration Beds/Aeration Beds				X	
VEG	BH050	Fish Hatchery/Fish Farm/Marine Farm				X	
VEG	BH080	Lake/Pond				X	
VEG	BH095	Marsh/Swamp				X	
VEG	BH130	Reservoir				X	
VEG	BH140	River/Stream				X	
VEG	BH155	Salt Evaporator				X	
VEG	BJ110	Tundra				X	
VEG	DA020	Barren Ground				X	
VEG	EA010	Cropland				X	

TABLE F-1. DTOP codes by coverage and feature type (Continued).

Layer	FACC Code	Feature Name	END	CND	EDG	FAC	TXT
VEG	EA030	Nursery				X	
VEG	EA040	Orchard/Plantation				X	
VEG	EA050	Vineyards				X	
VEG	EB010	Grassland				X	
VEG	EB020	Scrub/Brush				X	
VEG	EC010	Bamboo/Cane				X	
VEG	EC030	Trees				X	
VEG	ZD020	Void Collection Area				X	

F.3.2 FACC attributes by FACC features and feature types. Table F-2 contains all valid FACC features, attributes, and their primitive types for each coverage. Please note that some these codes are no longer in compliance with the newer releases of DIGEST, Part 4, FACC, Edition 2.0, June 1997

TABLE F-2. DTOP Attribute by FACC Codes and Feature Type.

Layer	Feature Name	FACC Code	Attr.	END	CND	EDG	FAC	TXT
BCH	Beach Zone	BA060	BIT				X	
			VDC				X	
BND	Cairn	AL025	-	x				
BND	Coastline/Shoreline	BA010	ACC			x		
			SLT			x		
			VDC			x		
BND	Spot Elevation	CA030	ACC	x				
			ELA	x				
			MCC	x				
			ZV2	x				
BND	Oasis	EC020	-				x	
			VEG	x				
BND	Administrative Boundary	FA000	ACC			x		
			BST			x		
			NM3			x		
			NM4			x		
			USE			x		
BND	Armistice Line	FA020	ACC			x		
			NM3			x		
			NM4			x		
BND	Cease-Fire Line	FA030	ACC			x		
BND	Defacto Boundary	FA060	ACC			x		
			NM3			x		
			NM4			x		
			TXT			x		
			USE			x		
BND	Demilitarized Zone	FA070	ACC				x	
BND	International Date Line	FA110	-			x		
BND	Zone of Occupation	FA170	ACC				x	
			NAM				x	
BND	Boundary Monument	ZB030	NAM	x	x			
BND	Control Point/Control Station	ZB035	CPA	x	x			
			ZV2	x	x			
BND	Void Collection Area	ZD020	VCA				x	
BND	Named Location	ZD040	-					x
BND	Text Description	ZD045	-					x
DQ	Void Collection Area	ZD020	VCA				x	
			VCT				x	
DQ	Text Description	ZD045	-					x

TABLE F-2. DTOP Attribute by FACC Codes and Feature Type (Continued).

Layer	Feature Name	FACC Code	Attr.	END	CND	EDG	FAC	TXT
HYDRO	Well	AA050	EXS	x				
			HYC	x				
			NAM	x				
			PRO	x				
			SCC	x				
			WFT	x				
			YWQ	x				
HYDRO	Foreshore	BA020	MCC				x	
			MCS				x	
HYDRO	Breakwater/Groyne	BB040	VRR			x	x	
			WID			x	x	
HYDRO	Jetty	BB140	LEN			x	x	
			VRR			x	x	
			WID			x	x	
HYDRO	Seawall	BB230	-			x		
HYDRO	Pile/Piling/Post	BD100	VRR	x			x	
HYDRO	Reef	BD120	COD			x	x	
			MCC			x	x	
			VRR			x	x	
HYDRO	Rock	BD130	HDI	x				
			LEN	x				
			MCC	x				
			NAM	x				
			VRR	x				
HYDRO	Wreck	BD180	LOC	x				
			VRR	x				
HYDRO	Void Collection Area	ZD020	VCA				x	
HYDRO	Named Location	ZD040	-					x
HYDRO	Text Description	ZD045	-					x
IND	Mine	AA010	EXS	x			x	
			MIN	x			x	
			NAM	x			x	
			PRO	x			x	
IND	Quarry	AA012	EXS	x			x	
			PRO	x			x	
IND	Rig/Superstructure	AA040	EXS	x				
			HGT	x				
			LOC	x				
			PRO	x				
			ZV2	x				
IND	Well	AA050	EXS	x				
			NAM	x				
			PRO	x				
IND	Disposal Site/Waste Pile	AB000	PRO				x	
IND	Wrecking Yard/Scrap Yard	AB010	-				x	

TABLE F-2. DTOP Attribute by FACC Codes and Feature Type (Continued).

Layer	Feature Name	FACC Code	Attr.	END	CND	EDG	FAC	TXT
IND	Processing Plant/Treatment Plant	AC000	NAM	x			x	
			PRO	x			x	
			EXS	x			x	
			YHT	x			x	
IND	Catalytic Cracker	AC020	YHT	x				
IND	Chimney/Smokestack	AF010	EXS	x				
			HGT	x				
			ZV2	x				
IND	Conveyor	AF020	-			x		
IND	Cooling Tower	AF030	EXS	x				
			HGT	x				
			ZV2	x				
IND	Crane	AF040	EXS	x				
			HGT	x				
			ZV2	x				
IND	Flare Pipe	AF070	EXS	x				
			HGT	x				
			LOC	x				
			ZV2	x				
IND	Feedlot/Stockyard/ Holding Pen	AJ030	-				x	
IND	Windmill	AJ050	EXS	x				
			HGT	x				
			ZV2	x				
IND	Particle Accelerator	AL140	LEN				x	
IND	Tower (Non-communication)	AL240	EXS	x				
			HGT	x				
			TTC	x				
			ZV2	x				
IND	Depot (Storage)	AM010	LOC				x	
			WID				x	
IND	Grain Bin/Silo	AM020						
			EXS	x				
			HGT	x				
			LEN	x				
			ZV2	x				
IND	Grain Elevator	AM030	EXS	x				
			HGT	x			x	
			LEN	x			x	
			ZV2	x				
IND	Storage Bunker/Storage Mound	AM060	LEN	x			x	
			PRO	x			x	

TABLE F-2. DTOP Attribute by FACC Codes and Feature Type (Continued).

Layer	Feature Name	FACC Code	Attr.	END	CND	EDG	FAC	TXT
IND	Tank	AM070	EXS	x			x	
			HGT	x			x	
			LEN	x			x	
			LOC	x			x	
			PRO	x			x	
			ZV2	x				
IND	Water Tower	AM080	EXS	x				
			HGT	x				
			ZV2	x				
IND	Flume	BH060	LOC			x		
IND	Cistern	BI010	-	x				
IND	Geophysical Prospecting Grid	FA090	-			x		
IND	Void Collection Area	ZD020	VCA				x	
IND	Named Location	ZD040	-					x
IND	Text Description	ZD045	-					x
OBS	Dragon Teeth	AL060	OHD			x	x	
			PFH			x	x	
			WID			x		
OBS	Fence	AL070	FTI			x		
			OHD			x		
			PFH			x		
OBS	Wall	AL260	MCC			x		
			OHD			x		
			PFH			x		
			WTI			x		
OBS	Moat	BH100	OHD			x		
			HYC			x		
			PFD			x		
			SGC			x		
			WID			x		
OBS	Bluff/Cliff/Escarpment	DB010	OHD			x		
			PFD			x		
			SGC			x		
OBS	Cut	DB070	OHD			x		
			PFD			x		
			SGC			x		
OBS	Depression	DB080	OHD			x		
			PFD			x		
			SGC			x		
OBS	Embankment/Fill	DB090	OHD			x		
			PFH			x		
			SGC			x		
			USE			x		

TABLE F-2. DTOP Attribute by FACC Codes and Feature Type (Continued).

Layer	Feature Name	FACC Code	Attr.	END	CND	EDG	FAC	TXT
OBS	Miscellaneous Obstacle	DB145	OHD			x	x	
			PFD			x	x	
			PFH			x	x	
			SGC			x	x	
			TXT			x	x	
OBS	Volcanic Dike	DB190	OHD			x		
			PFH			x		
			SGC			x		
OBS	Hedgerow	EA020	OHD			x		
			PFH			x		
OBS	Void Collection Area	ZD020	VCA				x	
PHYS	Salt Pan	BH150	-				x	
PHYS	Sebkha	BH160	-				x	
PHYS	Moraine	BJ020	-				x	
PHYS	Glacier	BJ030	-				x	
PHYS	Ice Cliff	BJ040	-			x		
PHYS	Ice Peak/Nunatak	BJ060	HGT	x				
			MCC	x				
PHYS	Ice Shelf	BJ065	-				x	
PHYS	Pack Ice	BJ070	PRC				x	
PHYS	Polar Ice	BJ080	PRC				x	
PHYS	Snow Field/Ice Field	BJ100	SIC				x	
PHYS	Asphalt Lake	DA005	-				x	
PHYS	Cave	DB030	NAM	x				
PHYS	Crevice/Crevasse	DB060	MCC			x	x	
			WID			x	x	
PHYS	Esker	DB100	-			x		
PHYS	Fault	DB110	NAM			x		
PHYS	Geothermal Feature	DB115	SWT	x				
PHYS	Rock Strata/Rock Formation	DB160	HGT	x			x	
			RKF	x			x	
PHYS	Sand Dune/Sand Hills	DB170	FEO				x	
			SSC				x	
PHYS	Volcano	DB180	HGT	x				
			LOC	x				
PHYS	Void Collection Area	ZD020	VCA				x	
PHYS	Named Location	ZD040	-					x
PHYS	Text Description	ZD045	-					x
POP	Fortification	AH050	NAM	x			x	
			WID	x			x	
POP	Mobile Home/Mobile Home Park	AI020	-				x	
POP	Amusement Park Attraction	AK020	EXS	x				
			HGT	x				
			SSC	x				
			ZV2	x				

TABLE F-2. DTOP Attribute by FACC Codes and Feature Type (Continued).

Layer	Feature Name	FACC Code	Attr.	END	CND	EDG	FAC	TXT
POP	Amusement Park	AK030	NAM				x	
POP	Athletic Field	AK040	NAM				x	
POP	Campground/Campsite	AK060	NAM				x	
POP	Fairgrounds	AK090	NAM				x	
POP	Golf Course	AK100	NAM				x	
POP	Park	AK120	NAM				x	
POP	Race Track	AK130	LEN			x		
			NAM			x		
POP	Stadium/Amphitheater	AK160	HGT				x	
			NAM				x	
POP	Swimming Pool	AK170	-				x	
POP	Zoo/Safari Park	AK180	NAM				x	
POP	Building	AL015	BFC	x		x	x	
			EXS	x		x	x	
			HGT	x		x	x	
			LEN	x		x	x	
			NAM	x		x	x	
			PRO	x		x	x	
			WID			x	x	
			ZV2	x				
POP	Built-Up Area	AL020	MCC				x	
			PH4				x	
			USE				x	
			USP				x	
			NAM				rat	
POP	Cemetery	AL030	EXS	x				
			NAM				x	
POP	Hut	AL100	-	x				
POP	Settlement	AL105	MCC				x	
			PH4				x	
			PPT				x	
			USE				x	
			USP				x	
			NAM				rat	
POP	Monument	AL130	EXS	x				
			HGT	x				
			NAM	x				
			SSC	x				
			ZV2	x				

TABLE F-2. DTOP Attribute by FACC Codes and Feature Type (Continued).

Layer	Feature Name	FACC Code	Attr.	END	CND	EDG	FAC	TXT
POP	Native Settlement	AL135	MCC				x	
			PH4				x	
			USE				x	
			USP				x	
			NAM				rat	
POP	Plaza/City Square	AL170	NAM				x	
			WID				x	
POP	Ruins	AL200	HGT	x			x	
			NAM	-			x	
POP	Underground Dwelling	AL250	-	x				
POP	Void Collection Area	ZD020	VCA				x	
POP	Named Location	ZD040	-					x
POP	Text Description	ZD045	-					x
SDR	Settling Basin/Sludge Pond	AC030	-				x	
SDR	Prepared Raft or Float Bridge Site	AQ111	-		x			
SDR	Island	BA030	-				x	
SDR	Water (Except Inland)	BA040	-				x	
SDR	Aqueduct	BH010	ATC			x		
			BMC			x		
			BVL			x		
			BVR			x		
			CDA			x		
			DW1			x		
			GW1			x		
			HL1			x		
			HR1			x		
			LOC			x		
			SL1			x		
			SR1			x		
			WD3			x		
			WV1			x		
			YDH			x		
			YDL			x		
			YGW			x		
			YHL			x		
			YHR			x		
			YVL			x		
			YVH			x		

TABLE F-2. DTOP Attribute by FACC Codes and Feature Type (Continued).

Layer	Feature Name	FACC Code	Attr.	END	CND	EDG	FAC	TXT
SDR	Canal	BH020	BMC			x	x	
			BVL			x	x	
			BVR			x	x	
			CDA			x	x	
			DW1			x	x	
			GW1			x	x	
			HL1			x	x	
			HR1			x	x	
			HYC			x	x	
			SL1			x	x	
			SR1			x	x	
			WD3			x	x	
			WV1			x	x	
			YDH			x	x	
			YDL			x	x	
			YGW			x	x	
			YHL			x	x	
			YHR			x	x	
			YVL			x	x	
			YVH			x	x	
SDR	Ditch	BH030	BMC			x	x	
			BVL			x	x	
			BVR			x	x	
			CDA			x	x	
			DW1			x	x	
			GW1			x	x	
			HL1			x	x	
			HR1			x	x	
			SL1			x	x	
			SR1			x	x	
			WD3			x	x	
			WV1			x	x	
			YDH			x	x	
			YDL			x	x	
			YGW			x	x	
			YHL			x	x	
			YHR			x	x	
			YVL			x	x	
			YVH			x	x	
SDR	Filtration Beds/Aeration Beds	BH040	-				x	
SDR	Fish Hatchery/Fish Farm/Marine Farm	BH050	-				x	
SDR	Ford	BH070	-		x	x		
SDR	Lake/Pond	BH080	HYC				x	
			NAM				x	
SDR	Land Subject to Inundation	BH090	-				x	

TABLE F-2. DTOP Attribute by FACC Codes and Feature Type (Continued).

Layer	Feature Name	FACC Code	Attr.	END	CND	EDG	FAC	TXT
SDR	Penstock	BH110	LEN			x		
			LOC			x		
SDR	Rapids	BH120	-		x	x		
SDR	Reservoir	BH130	HYC				x	
			NAM				x	
SDR	River/Stream	BH140	BMC			x	x	
			BVL			x	x	
			BVR			x	x	
			CDA			x	x	
			DW1			x	x	
			GW1			x	x	
			HFC			x	x	
			HL1			x	x	
			HR1			x	x	
			HYC			x	x	
			SL1			x	x	
			SR1			x	x	
			TID			x	x	
			WD3			x	x	
			WV1			x	x	
			YDH			x	x	
			YDL			x	x	
			YGW			x	x	
			YHL			x	x	
			YHR			x	x	
			YVL			x	x	
			YVH			x	x	
SDR	River Or Stream Vanishing Point	BH145	HFC		x			
SDR	Salt Evaporator	BH155	-				x	
SDR	Spring/Water-Hole	BH170	HYC	x	x			
			SCC	x	x			
			YWQ	x	x			
SDR	Waterfall	BH180	NAM		x	x		
SDR	Miscellaneous Surface Drainage Feature	BH200	TXT			x	x	
SDR	Dam/Weir	BI020	EXS	x	x	x	x	
			HGT	x	x	x	x	
			LEN	x	x	x	x	
			MCC	x	x	x	x	
			NAM	x	x	x	x	
			WD5	x	x	x	x	
SDR	Lock	BI030	EXS	x	x		x	
			LEN	x	x		x	
			WID	x	x		x	
SDR	Sluice Gate	BI040	LEN		x	x		
SDR	Water Intake Tower	BI050	WID	x			x	
SDR	Void Collection Area	ZD020	VCA				x	

TABLE F-2. DTOP Attribute by FACC Codes and Feature Type (Continued).

Layer	Feature Name	FACC Code	Attr.	END	CND	EDG	FAC	TXT
SDR	Named Location	ZD040	-					x
SDR	Text Description	ZD045	-					x
SLP	Settling Basin/Sludge Pond	AC030	-				x	
SLP	Water (Except Inland)	BA040	-				x	
SLP	Canal	BH020	-				x	
SLP	Ditch	BH030	-				x	
SLP	Filtration Beds/Aeration Beds	BH040	-				x	
SLP	Fish Hatchery/Fish Farm/Marine Farm	BH050	-				x	
SLP	Lake/Pond	BH080	-				x	
SLP	Reservoir	BH130	-				x	
SLP	River/Stream	BH140	-				x	
SLP	Salt Evaporator	BH155	-				x	
SLP	Slope Polygoon	SA050	GSC				x	
			SPR				x	
SLP	Void Collection Area	ZD020	VCA				x	
SMC	Settling Basin/Sludge Pond	AC030	-				x	
SMC	Built-Up Area	AL020	-				x	
SMC	Settlement	AL105	PPT				x	
SMC	Native Settlement	AL135	-				x	
SMC	Water (Except Inland)	BA040	-				x	
SMC	Canal	BH020	-				x	
SMC	Ditch	BH030	-				x	
SMC	Filtration Beds/Aeration Beds	BH040	-				x	
SMC	Fish Hatchery/Fish Farm/Marine Farm	BH050	-				x	
SMC	Lake/Pond	BH080	-				x	
SMC	Reservoir	BH130	-				x	
SMC	River/Stream	BH140	-				x	
SMC	Salt Evaporator	BH155	-				x	
SMC	Snow Field/Ice Field	BJ100	SM1				x	
			SRD				x	
			SWC				x	
SMC	Ground Surface element	DA010	SM1				x	
			SMC				x	
			SRD				x	
			STG				x	
			STP				x	
			SWC				x	
			YSD				x	
			YWT				x	
SMC	Void Collection Area	ZD020	VCA				x	

TABLE F-2. DTOP Attribute by FACC Codes and Feature Type (Continued).

Layer	Feature Name	FACC Code	Attr.	END	CND	EDG	FAC	TXT
TRANS	Gallery	AL075	EXS		x	x		
			HCA		x	x		
			LEN		x	x		
			OHC		x	x		
			TUC		x	x		
TRANS	Overhead Obstruction Location	AL155	HCA		x	x		
			OHC		x	x		
			TUC		x	x		
TRANS	Snow Shed/Rock Shed	AL210	EXS		x	x		
			HCA		x	x		
			LEN		x	x		
			OHC		x	x		
			TUC		x	x		
			USE		x	x		
TRANS	Railroad	AN010	EXS			x		
			LOC			x		
			LTN			x		
			NAM			rat		
			RGC			x		
			RRA			x		
			RRC			x		
			SGC			x		
TRANS	Railroad Siding/Railroad Spur	AN050	CTL			x		
			EXS			x		
			RGC			x		
			RRA			x		
			RSA			x		
TRANS	Railroad Yard/Marshalling Yard	AN060	CTL				x	
			EXS				x	
TRANS	Railroad Turntable	AN075	-		x			
TRANS	Cart Track	AP010	ACC			x		
			WD1			x		
			WTC			x		
TRANS	Interchange	AP020	EXS			x		
			LOC			x		
			RST			x		
			SGC			x		
			WD1			x		
			WTC			x		
TRANS	Road	AP030	ACC			x		
			EXS			x		
			LOC			x		
			MED			x		
			NAM			rat		
			RST			x		

TABLE F-2. DTOP Attribute by FACC Codes and Feature Type (Continued).

Layer	Feature Name	FACC Code	Attr.	END	CND	EDG	FAC	TXT
			SGC			x		
			WD1			x		
			WTC			x		
TRANS	Trail	AP050	WTC			x		
TRANS	Aerial Cableway Lines/Ski Lift Lines	AQ010	USE			x		
			YHT			x		
TRANS	Bridge/Overpass/Viaduct	AQ040	BCC		x	x		
			BOT		x	x		
			BSC		x	x		
			EXS		x	x		
			HCA		x	x		
			IDN		x	x		
			LC1		x	x		
			LC2		x	x		
			LC3		x	x		
			LC4		x	x		
			LEN		x	x		
			NOS		x	x		
			OHC		x	x		
			TUC		x	x		
			UBC		x	x		
			WD1		x	x		
			WT2		x	x		
TRANS	Bridge Span	AQ045	IDN		x			
			MCC		x			
			YLN		x			
TRANS	Constriction/Expansion	AQ058	LEN		x			
			TUC		x			
			WD1		x			
TRANS	Control Tower	AQ060	EXS	x				
			HGT	x				
			ZV2	x				
TRANS	Culvert	AQ065	WD2		x			
TRANS	Ferry Crossing	AQ070	EXS		x	x		
			FCL		x	x		
			TUC		x	x		
TRANS	Mooring Mast	AQ110	EXS	x				
			HGT	x				
			ZV2	x				
TRANS	Sharp Curve	AQ118	-		x			
TRANS	Steep Grade	AQ120	SGC		x			
			TUC		x			
TRANS	Tunnel	AQ130	EXS		x	x		
			HCA		x	x		
			LEN		x	x		
			NAM		x	x		
			OHC		x	x		

TABLE F-2. DTOP Attribute by FACC Codes and Feature Type (Continued).

Layer	Feature Name	FACC Code	Attr.	END	CND	EDG	FAC	TXT
			TUC		x	x		
TRANS	Vehicle Stopping Area/Rest Area	AQ135	WID				x	
TRANS	Vehicle Storage/Parking Area	AQ140	TUC				x	
TRANS	Anchorage	BB010	MAC	x			x	
TRANS	Drydock	BB090	LOC				x	
			WID				x	
TRANS	Pier/Wharf/Quay	BB190	LEN			x	x	
			WID			x	x	
TRANS	Ramp(Maritime)	BB220	LEN			x	x	
			VRR			x	x	
			WID			x	x	
TRANS	Ford	BH070	-		x	x		
TRANS	Mountain Pass	DB150	NAM		x			
			ZV2		x			
TRANS	Airport/Airfield	GB005	APT	x			x	
			COD	x			x	
			EXS	x			x	
			NAM	x			x	
			USE	x			x	
TRANS	Airport Lighting	GB010	LFA	x				
TRANS	Apron/Hardstand	GB015	WID				x	
TRANS	Helicopter Landing Pad	GB030	APT	x				
			NAM	x				
			USE	x				
TRANS	Overrun/Stopway	GB045	-				x	
TRANS	Runway	GB055	EXS				x	
			LEN				x	
			RST				x	
			WID				x	
			ZV3				x	
TRANS	Taxiway	GB075	-				x	
TRANS	Void Collection Area	ZD020	VCA				x	
TRANS	Named Location	ZD040	-					x
TRANS	Text Description	ZD045	-					x
UTIL	Power Plant	AD010	EXS				x	
			HGT				x	
			NAM				x	
			PPC				x	
			WID				x	
UTIL	Solar Panels	AD020	LEN	x				
UTIL	Substation/Transformer Yard	AD030	EXS	x	x		x	
			WID	x	x		x	
UTIL	Ramp [Pipeline Crossing Point]	AL195	LEN		x			
			LOC		x			

TABLE F-2. DTOP Attribute by FACC Codes and Feature Type (Continued).

Layer	Feature Name	FACC Code	Attr.	END	CND	EDG	FAC	TXT
			WID		x			
UTIL	Pipeline/Pipe	AQ113	ACC			x		
			EXS			x		
			LOC			x		
			OHD			x		
			PFH			x		
			PRO			x		
UTIL	Pumping Station	AQ116	EXS	x			x	
			PRO	x			x	
			WID	x			x	
UTIL	Disk/Dish	AT010	EXS	x				
			HGT	x				
			ZV2	x				
UTIL	Power Transmission Line	AT030	ACC			x		
			EXS			x		
			TST			x		
			YHT			x		
UTIL	Communication Building	AT050	EXS	x			x	
			HGT	x			x	
			LEN	x			x	
			NAM	x			x	
			NST	x			x	
			ZV2	x				
UTIL	Telephone Line/Telegraph Line	AT060	EXS			x		
UTIL	Communication Tower	AT080	EXS	x				
			HGT	x				
			NAM	x				
			NST	x				
			ZV2	x				
UTIL	Void Collection Area	ZD020	VCA				x	
UTIL	Named Location	ZD040	-					x
UTIL	Text Description	ZD045	-					x
VEG	Settling Basin/Sludge Pond	AC030	-				x	
VEG	Built-Up Area	AL020	-				x	
VEG	Settlement	AL105	PPT				x	
VEG	Native Settlement	AL135	-				x	
VEG	Water (Except Inland)	BA040	-				x	
VEG	Canal	BH020	-				x	
VEG	Ditch	BH030	-				x	
VEG	Filtration Beds/Aeration Beds	BH040	-				x	
VEG	Fish Hatchery/Fish Farm/Marine Farm	BH050	-				x	
VEG	Lake/Pond	BH080	-				x	

TABLE F-2. DTOP Attribute by FACC Codes and Feature Type (Continued).

Layer	Feature Name	FACC Code	Attr.	END	CND	EDG	FAC	TXT
VEG	Marsh/Swamp	BH095	BUD				x	
			STR				x	
			VEG				x	
			VH3				x	
			WTR				x	
VEG	Reservoir	BH130	-				x	
VEG	River/Stream	BH140	-				x	
VEG	Salt Evaporator	BH155	-				x	
VEG	Tundra	BJ110	-				x	
VEG	Barren Ground	DA020	VEG				x	
VEG	Nursery	EA030	-				x	
VEG	Cropland	EA010	FTC				x	
			VEG				x	
VEG	Orchard/Plantation	EA040	BUD				x	
			PHT				x	
			SD1				x	
			SD2				x	
			STR				x	
			TS1				x	
			TS2				x	
			VEG				x	
			VH3				x	
			WTR				x	
VEG	Vineyards	EA050	-				x	
VEG	Grassland	EB010	VEG				x	
VEG	Scrub/Brush	EB020	BUD				x	
VEG	Bamboo/Cane	EC010	-				x	
VEG	Trees	EC030	BUD				x	
			PHT				x	
			SD1				x	
			SD2				x	
			STR				x	
			TS1				x	
			TS2				x	
			VEG				x	
			VH3				x	
			WTR				x	
VEG	Void Collection Area	ZD020	VCA				x	

DIGITAL TOPOGRAPHIC DATA (DTOP) DATA DICTIONARY DIFFERENCES WITH CURRENT FEATURE AND ATTRIBUTE CODING CATALOGUE (FACC)

G.1 SCOPE

G.1.1 Scope. This appendix provides information on the feature, attribute, and attribute value differences between DTOP data dictionary contained herein and The Digital Geographic Information Exchange Standard (DIGEST), Part 4, FACC, edition 2.0, June 1997, with Amendment A, February 1999. This includes updates through the November 1998 meeting of the Digital Geographic Information Working Group (DGIWG). It is not a mandatory part of the specification. The information contained herein is intended for guidance only.

G.2 APPLICABLE DOCUMENTS

This section is not applicable to this appendix.

G.3 DTOP DATA DICTIONARY DIFFERENCES WITH CURRENT FACC

G.3.1 DTOP – FACC differences.

a. The data provided in Table G-1 below show the differences between the FACC coding (edition 1.2, January 1994) shown herein and their corresponding equivalents in DIGEST, Part 4, FACC, edition 2.0, with Amendment A. Differences occur for a number of reasons. In some cases, NIMA proposals for changes attributes were rejected in favor of creating new attributes instead. The nations represented on the DGIWG are reluctant to change existing features or attributes because they do not know which states have used or are currently using which attributes. In other cases, features that had been combined together have been split into separate features. In some cases, new attributes have been added to FACC to separate mixed concepts contained in some of the value fields of many attributes. In a few cases, proposed changes were accepted after the publication of FACC, edition 1.2, January 1994, thus neither do they appear in that document. Sometimes systems and other requirements drive changes to the FACC.

b. While every effort has been made to ensure the completeness of these lists, document users are cautioned that they must meet all specified requirements listed in Section 3 and the other Appendixes of this specification, whether or not they are listed in Table G-1 or paragraph G.3.1.c.

Table G-1. Differences between DTOP and Latest FACC.

DTOP Code	DTOP Name	FACC Code	FACC Name	Comment
BA060	Beach Zone with Beach Indicator Type (BIT) attribute	BA023	Foreshore	BA060 not accepted by DGIWG; however, BIT became Nearshore (BA021), Backshore (BA022), and Foreshore (BA023)
OHC	Overhead Clearance Category	OHC and OCC	Overhead Clearance Category and Overhead Clearance Code	Split because of mixed data types
HCA	Horizontal Clearance Attribute	HCA and HCC	Horizontal Clearance Attribute and Horizontal Clearance Code	Split because of mixed data types
YGW	Gap Width with greater precision	GW3	Gap Width Range (3)	YGW changed to GW3 by DGIWG
PFD	Predominant Feature Depth	PFE	Predominant Feature Depth with greater than 1 meter resolution	DTOP has decimeter requirement, PFD has 1 meter resolution
PFH	Predominant Feature Height	PFG	Predominant Feature Height with greater than 1 meter resolution	DTOP has decimeter requirement, PFH has 1 meter resolution
YHL	Bank Height Left at Greater Precision	HL3	Bank Height Left (3)	YHL changed to HL3 by DGIWG
YHR	Bank Height Right at Greater Precision	HR3	Bank Height Right (3)	YHR changed to HR3 by DGIWG
YHT	Height Range with Greater Precision	HTR	Height Range	YHT changed to HTR by DGIWG
YSD	Soil Depth with Greater Precision	SDE	Soil Depth with Greater Precision	YSD changed to SDE by DGIWG
STR	Summer Tree Cover Density Code	STQ	Summer Tree Cover Density Code	Mixed data types-need to align with WTR
UBC	Underbridge Clearance Category	UBD	Underbridge Clearance with Greater Precision	DTOP has decimeter requirement, UBC has 1 meter resolution

c. In addition, the following proposed new attributes or changes to FACC, edition 1.2, January 1994, attributes were also incorporated into this DTOP specification. As a result of DWIWG acceptance or changing, the listings of these attributes shown throughout this specification do not match those given in FACC, edition 1.2, January 1994, which is the cited reference for this specification. Attributes listed above in Table G-1 are not repeated below:

SD1	Stem Diameter Size Range (1)	Accepted
TS1	Tree Spacing Range (1)	Changed to TS3
VH3	Predominant Vegetation Height Range (3)	Accepted
WT2	Width of Second traveled Way	Accepted
YDH	Water Depth Mean (Seasonal High Water)	Accepted
YDL	Water Depth Mean (Seasonal Low Water)	Accepted
YVH	Water Velocity Mean (Seasonal High Water)	Accepted
YVL	Water Velocity Mean (Seasonal Low Water)	Accepted
YWQ	Water Quality Attribute	Accepted
YWT	Depth to Water Table	Accepted

INDEX

	PARAGRAPH	PAGE
Abbreviations and acronyms	6.4.7	43
Absolute horizontal accuracy	3.2.1	4
Absolute horizontal accuracy	6.4.1	42
Absolute vertical accuracy	3.2.2	4
Absolute vertical accuracy	6.4.2	42
Accuracy	3.2	4
Acquisition requirements	6.2	42
Actual definitions	6.4.8	44
Analysis limitation	6.1.2	42
Appendix A, Digital Topographic Data (DTOP) data dictionary organization		46
Appendix B, DTOP database VPF tables and contents		48
Appendix C, Reference library		50
Appendix D, Data library		64
Appendix E, DTOP thematic coverage directory record layout		76
Appendix F, DTOP features		438
Appendix G, Digital Topographic Data (DTOP) data dictionary differences with current Feature and Attribute Coding Catalogue (FACC)		459
Applicable documents	2	1
Applicable documents	A.2	46
Applicable documents	B.2	48
Applicable documents	C.2	50
Applicable documents	D.2	64
Applicable documents	E.2	76
Applicable documents	F.2	438
Applicable documents	G.2	459
Bar coding on CD-ROM cases	3.18.5	39
Beach coverage	E.3.2	79
Beach coverage glossary	E.3.2.1	81
Boundaries coverage	E.3.3	83
Boundaries coverage glossary	E.3.3.1	98
Cardboard sleeve mailer	3.18.4	39
CD labeling	3.18.1	38
CD-ROM labeling and packaging	3.18	37
CD-ROM packaging	3.19	40
Changes from previous issue	6.7	45
Circular error (CE)	6.4.3	42
Classification and special handling of thematic files	6.8	45
Classification of inspection	4.1	40
Concluding material		474
Conformance inspection	4.3	40
Continuity	3.5	4
Coordinate system	3.9	7
Coverage attribute (description) table	C.3.1.1	50
Coverage attribute (description) table	D.3.1.1	65
Coverage directory files	3.14.4	14
Coverage level thematic data	3.13.3	9
Coverage metadata	3.14.4.1	20

INDEX (Continued)

	PARAGRAPH	PAGE
Coverage tables and file order	E.3.1	76
Coverage topology	3.14.4.3	23
Cross tile topology	3.15.2	34
Data coverages	3.14.4.2	23
Data dictionary organization	A.3.1	46
Data format	3.10	7
Data library	D.3	64
Data library reference coverages and tables	D.3.2	70
Data quality coverage	E.3.4	102
Data quality table	C.3.1.4	52
Data quality table	D.3.1.4	68
Database and library naming conventions	3.14.2	11
Database description	3.11	7
Database directory files	3.14.1	10
Database header table	B.3.1.3	49
Database metadata tables	B.3.1	48
Database reference (DBREF) coverage	C.3.3.1	58
Datum	3.3	4
Definitions	6.4	42
Dimensions	3.7	5
Directories	3.12.1	8
Distribution medium	3.11.2	8
Distribution medium	3.17	37
Documentation tables	3.14.4.1.4	23
DTOP data dictionary differences with current FACC	G.3	459
DTOP data dictionary organization	A.3	46
DTOP database VPF tables and contents	B.3	48
DTOP directory organization	3.13	9
DTOP – FACC differences	G.3.1	459
DTOP features	F.3	438
DTOP organization	6.1.1.2	41
DTOP regional databases	3.13.1	9
DTOP thematic coverage directory record layout	E.3	76
DTOP tile directory hierarchy	3.15.1.1	33
DTOP tiling scheme	3.15.1	33
DTOP tiling schemes	3.15	33
FACC attributes by FACC features and feature types	F.3.2	444
FACC feature code by coverage and feature types	F.3.1	438
Feature and attribute coding scheme	3.8	6
Feature class schema table	3.14.4.1.1	20
Feature class structure level	3.14.5	23
Feature class types	3.14.5.1	24
Feature class/feature table names	3.14.5.2	24
Feature index	3.14.4.1.3	21
Feature table structure and contents	3.14.5.5	26
File structure	3.11.1	8
First article	3.1	4
First article inspection	4.2	40
General	2.1	1
General usage	6.1.1	41

INDEX (Continued)

	PARAGRAPH	PAGE
Geographic reference table	C.3.1.3	52
Geographic reference table	D.3.1.3	67
Government documents	2.2	2
Horizontal datum	3.3.1	4
Hydrography coverage	E.3.5	111
Hydrography coverage glossary	E.3.5.1	125
Index		462
Indices	3.12.3	8
Industry coverage	E.3.6	129
Industry coverage glossary	E.3.6.1	160
Information booklet	3.18.2	38
Information booklet DTOP specific items	3.18.2.1	38
Information booklet text	3.18.2.2	38
Installation instructions	3.19.3	40
Intended use	6.1	41
Jewel case liner (back cover of case)	3.18.3	39
Library attribute (extent) table (LAT)	B.3.1.1	48
Library directory files	3.14.3	12
Library header table	C.3.1.2	51
Library header table	D.3.1.2	66
Library metadata	3.14.3.1	12
Library metadata tables	D.3.1	64
Library name	B.3.1.2	48
Library reference character value description table	C.3.2.1.4	57
Library reference coverage directory and files	C.3.2.1	54
Library reference coverage directory and files	D.3.2.2	72
Library reference coverage tables and file order	C.3.3	57
Library reference coverages	3.14.3.2	13
Library reference feature class schema table	C.3.2.1.1	55
Library reference feature class schema table	D.3.2.2.1	73
Library reference feature tables	C.3.2.1.2	55
Library reference feature tables	D.3.2.2.2	73
Library reference primitive tables	C.3.2.1.3	56
Library reference primitive tables	D.3.2.2.3	74
Lineage narrative table	C.1.5	54
Lineage narrative table	D.3.1.5	69
Linear error (CE)	6.4.4	42
List of Figures		463
List of Tables		464
Minimum sizes	3.7.2	5
Naming conventions	3.16	34
NATO standardization agreements (STANAGs)	6.6.1	45
NIMA customer help desk	6.9	45
Non-government publications	2.3	3
Not applicable condition	3.8.1.2	7
Notes	6	41
Notes regarding table form	A.3.2	46
Null condition	3.8.1.3	7
Number of feature classes	3.14.5.3	24
Obstacles coverage	E.3.7	171

INDEX (Continued)

	PARAGRAPH	PAGE
Obstacles coverage glossary	E.3.7.1	186
Order of precedence	2.4	3
Other government documents, drawings, and publications	2.2.2	3
Package information	3.19.2	40
Packaging	5	41
Packaging	5.1	41
Packaging container	3.19.1	40
Physiography coverage	E.3.8	191
Physiography coverage glossary	E.3.8.1	205
Place name (PLACENAM) coverage	C.3.3.3	62
Political entities (POLBND) coverage	C.3.3.2	60
Population coverage	E.3.9	209
Population coverage glossary	E.3.9.1	239
Primitive tables and associated files	3.14.6	29
Purpose	1.2	1
Reference library	C.3	50
Reference library coverage and tables	C.3.2	54
Reference and data library directory	3.13.2	9
Reference library metadata tables	C.3.1	50
Relative accuracy	3.2.3	4
Requirements	3	4
Review of construction records	4.3.1	40
Scope	1	1
Scope	1.1	1
Scope	A.1	46
Scope	A.1.1	46
Scope	B.1	48
Scope	B.1.1	48
Scope	C.1	50
Scope	C.1.1	50
Scope	D.1	64
Scope	D.1.1	64
Scope	E.1	76
Scope	E.1.1	76
Scope	F.1	438
Scope	F.1.1	438
Scope	G.1	459
Scope	G.1.1	459
Security	3.4	4
Security classification	3.4.1	4
Security classification of product	3.4.2	4
Security classification of specification	3.4.3	4
Slope/Surface Configuration coverage	E.3.11	304
Slope/Surface Configuration coverage glossary	E.3.11.1	311
Soil/Surface Materials coverage	E.3.12	313
Soil/Surface Materials coverage glossary	E.3.12.1	324
Sources	6.1.1.1	41
Specific DTOP labeling items	3.18.1.1	38
Specifications, standards, and handbooks	2.2.1	2
Standardization agreements	6.6	45

INDEX (Continued)

	PARAGRAPH	PAGE
Subject terms (keywords) listing	6.5	44
Supersession	6.3	42
Surface drainage coverage	E.3.10	249
Surface drainage coverage glossary	E.3.10.1	291
Text feature class	3.14.5.4	24
Thematic layer organization	3.6	5
Tile directory description and naming	3.15.1.2	33
Tile reference coverage directory and files	D.3.2.1	70
Tile reference feature class schema table	D.3.2.1.1	70
Tile reference feature tables	D.3.2.1.2	71
Tile reference primitive tables	D.3.2.1.3	72
TLM	6.4.6	43
Transportation coverage	E.3.13	329
Transportation coverage glossary	E.3.13.1	378
TTADB	6.4.5	43
Unit of measure	3.7.1	5
Unknown value condition	3.8.1.1	7
Unknown, not applicable, and null values	3.8.1	6
Utilities coverage	E.3.14	392
Utilities coverage glossary	E.3.14.1	413
Value description tables	3.14.4.1.2	21
Vegetation coverage	E.3.15	420
Vegetation coverage glossary	E.3.15.1	433
Verification	4	40
Vertical datum	3.3.2	4
Visual review	4.3.2	40
Volume identifier	3.18.1.2	38
VPF compliance	4.3.3	40
VPF structure levels, tables, and files	3.14	10
VPF table and file structure	3.12	8
VPF tables	3.12.2	8

LIST OF FIGURES

FIGURE		PAGE
1	Illustration of a VPF table	9
2	VPF structure levels and DTOP implementation	10
3	DTOP database directory	11
4	DTOP data library structure	12
5	DTOP reference library structure	13
6	DTOP data library	16
7	DTOP reference library roadmap	20
8	DTOP tile directory hierarchy	35
9	Coordinates for a 15° by 15° cell of GEOREF system (FJ)	36
10	Example of coordinates for GEOREF 1° by 1° cell (FJOB) for identifying DTOP tiles (FJQBT1500)	37

LIST OF TABLES

TABLE		PAGE
1	DTOP coverages by VPF structure level	6
2	DTOP database table and file names and description	11
3	DTOP library tables, file names, and description	14
4	Directories and descriptions for DTOP thematic coverages	15
5	DTOP coverage metadata tables and description	21
6	Feature class attribute table FCA) definition	22
7	Format and example of content for feature index table (FIT)	22
8	Feature table suffixes	24
9	DTOP thematic coverages and feature classes	25
10	Format and example of content for a tiled point feature table (lndfrmp.pft)	27
11	Format and example of content for a tiled node feature table (springc.pft)	27
12	Format and example of content for a tiled line feature table (lndfrml.lft)	28
13	Format and example of content for a tiled area feature table (lndfrmla.aft)	28
14	Format and example of content for a tiled text feature table (hydrotxt.tft)	29
15	Primitive table and associated files	29
16	Format and example of content for entity node primitive table (END)	30
17	Format and example of content for connected node primitive table (CND)	30
18	Format and example of content for edge (EDG) primitive table	31
19	Format and example of content for face (FAC) primitive table	31
20	Format and example of content for text (TXT) primitive table	32
21	Format and example of content for ring (RNG) table	32
22	Format and example of content for bounding rectangle tables (fbr or ebr)	32
23	Naming conventions for DTOP tables and files	34
B-1	Format and content for library attribute (extent) table	48
B-2	Format and content for database header table (DHT)	49
C-1	Format and content for RFERENCE coverage attribute (description) table (CAT)	50
C-2	Format and content for RFERENCE library header table (LHT)	51
C-3	Format and content for a RFERENCE geographic reference table (GRT)	52
C-4	Format and content for example data quality table (DQT)	53

LIST OF TABLES (Continued)

TABLE		PAGE
C-5	Format and content for lineage documentation table (lineage.doc)	54
C-6	Content and format for libref feature class schema table (FCS)	55
C-7	Format and content for libref line feature table (libref.lft)	55
C-8	Format and content for libref text feature table (libreft.tft)	56
C-9	Format and example of content for libref text primitive table (TXT)	56
C-10	Library reference character value description table	57
C-11	RFERENCE coverages	57
C-12	RFERENCE library feature table(s) in coverages	57
C-13	Content and format for DBREF coverage feature class schema table	58
C-14	DBREF area feature table	58
C-15	DBREF text feature table	59
C-16	Database reference character value description table	59
C-17	Content and format for POLBND coverage feature class schema table	60
C-18	POLBND area feature table	60
C-19	POLBND text feature table	61
C-20	Political entities character value description table	61
C-21	Content and format for PLACENAM coverage feature class schema table	62
C-22	PLACENAM point feature table	62
C-23	PLACENAM text feature table	63
D-1	Format and sample content for coverage attribute (description) table (CAT)	65
D-2	Format and content for example library header table (LHT)	66
D-3	Format and sample content for an geographic reference table (GRT)	67
D-4	Format and content for example data quality table (DQT)	68
D-5	Format and sample content for lineage documentation table (lineage.doc)	69
D-6	Content and format for TILEREF feature class schema table	70
D-7	Format and sample content for DTOP TILEREF area feature table	71
D-8	Format and content for TILEREF text feature table	71
D-9	Format and example content for TILEREF text primitive table	72
D-10	Content and format for libref feature class schema table	73
D-11	Format and content for libref line feature table	73
D-12	Format and content for libref text feature table	74

LIST OF TABLES (Continued)

TABLE		PAGE
D-13	Format and example of the content for libref text primitive table	74
D-14	Library reference character value description table	75
E-1	DTOP data coverages	76
E-2	DTOP feature table(s) in tiled coverages	77
E-3	Content and format for Beach coverage feature class schema table	79
E-4	Beach area join table	80
E-5	Beach area feature table	80
E-6	Beach feature class attribute table	81
E-7	Beach character value description table	81
E-8	Beach integer value description table	82
E-9	Content and format for Boundaries coverage feature class schema table	83
E-10	Elevation point feature table	84
E-11	Markers point feature table	85
E-12	Oasis point feature table	86
E-13	Markers node feature table	87
E-14	Coastline line join table	88
E-15	Coastline line feature table	88
E-16	Political boundary line join table	90
E-17	Political boundary line feature table	90
E-18	Boundaries void collection area join table	92
E-19	Boundaries void collection area feature table	92
E-20	Oasis area join table	93
E-21	Oasis area feature table	93
E-22	Political boundary area join table	94
E-23	Political boundary area feature table	94
E-24	Boundaries text feature table	95
E-25	Boundaries feature class attribute table	96
E-26	Boundaries character value description table	97
E-27	Boundaries integer value description table	100
E-28	Content and format for data quality coverage feature class schema table	102
E-29	Data quality line join table	103
E-30	Data quality line feature table	103
E-31	Data quality line related attribute table	104
E-32	Data quality area join table	105
E-33	Data quality area feature table	105
E-34	Data quality area related attribute table	106
E-35	Data quality void collection area join table	107
E-36	Data quality void collection area feature table	107
E-37	Data quality text feature table	108
E-38	Data quality feature class attribute table	109
E-39	Data quality character value description table	110
E-40	Data quality integer value description table	110

LIST OF TABLES (Continued)

TABLE		PAGE
E-41	Content and format for hydrography coverage feature class schema table	111
E-42	Danger point feature table	112
E-43	Well point feature table	114
E-44	Reef line join table	116
E-45	Reef line feature table	116
E-46	Sea structure line join table	117
E-47	Sea structure line feature table	117
E-48	Coast area join table	118
E-49	Coast area feature table	118
E-50	Danger area join table	119
E-51	Danger area feature table	119
E-52	Hydrography void collection area join table	120
E-53	Hydrography void collection area feature table	120
E-54	Sea structure area join table	121
E-55	Sea structure area feature table	121
E-56	Hydrography text feature table	122
E-57	Hydrography feature class attribute table	123
E-58	Hydrography character value description table	124
E-59	Hydrography integer value description table	127
B-60	Content and format for industry coverage feature class schema table	129
B-61	Agricultural storage point feature table	131
E-62	Cistern point feature table	132
B-63	Extraction point feature table	133
B-64	Obstruction point feature table	135
B-65	Processing point feature table	137
B-66	Rig Well point feature table	139
B-67	Storage point feature table	141
B-68	Tower point feature table	143
B-69	Industry line join table	144
B-70	Industry line feature table	144
B-71	Agricultural storage area join table	145
B-72	Agricultural storage area feature table	145
B-73	Disposal area join table	146
B-74	Disposal area feature table	146
B-75	Extraction area join table	147
B-76	Extraction area feature table	147
B-77	Industry void area join table	149
B-78	Industry void area feature table	149
B-79	Nuclear accelerator area join table	150
B-80	Nuclear accelerator area feature table	150
B-81	Processing area join table	151
B-82	Processing area feature table	151
B-83	Storage area join table	153
B-84	Storage area feature table	153
B-85	Stockyard area join table	155
B-86	Stockyard area feature table	155
B-87	Industry text feature table	156

LIST OF TABLES (Continued)

TABLE PAGE

B-88 Industry feature class attribute table 157
B-89 Industry character value description table 159
B-90 Industry integer value description table 165

E-91 Content and format for Obstacles coverage feature class schema table 171
E-92 Manmade obstacle line join table 172
E-93 Manmade obstacle line feature table 172
E-94 Depth obstacle line join table 174
E-95 Depth obstacle line feature table 174
E-96 Miscellaneous obstacle line join table 176
E-97 Miscellaneous obstacle line feature table 176
E-98 Obstacle line join table 178
E-99 Obstacle line feature table 178
E-100 Miscellaneous obstacle area join table 180
E-101 Miscellaneous obstacle area feature table 180
E-102 Obstacles void collection area join table 182
E-103 Obstacles void collection area feature table 182
E-104 Dragon teeth area join table 183
E-105 Dragon teeth area feature table 183
E-106 Obstacles feature class attribute table 184
E-107 Obstacles character value description table 185
E-108 Obstacle integer value description table 189

E-109 Content and format for physiography coverage feature class schema table 191
E-110 Cave point feature table 192
E-111 Landform point feature table 193
E-112 Thermal point feature table 194
E-113 Landform line join table 195
E-114 Landform line feature table 195
E-115 Asphalt area join table 196
E-116 Asphalt area feature table 196
E-117 Land ice area join table 197
E-118 Land ice area feature table 197
E-119 Landform 1 area join table 198
E-120 Landform 1 area feature table 198
E-121 Landform 2 area join table 199
E-122 Landform 2 area feature table 199
E-123 Sea ice area join table 200
E-124 Sea ice area feature table 200
E-125 Physiography void collection area join table 201
E-126 Physiography void collection area feature table 201
E-127 Physiography text feature table 202
E-128 Physiography feature class attribute table 203
E-129 Physiography character value description table 204
E-130 Physiography integer value description table 207

LIST OF TABLES - Continued

TABLE PAGE

E-131 Content and format for population coverage feature class schema table 209
E-132 Buildings point feature table 211
E-133 Fortification point feature table 213
E-134 Landmark point feature table 214
E-135 Miscellaneous population point feature table 215
E-136 Ruins point feature table 216
E-137 Buildings line join table 217
E-138 Buildings line feature table 217
E-139 Landmark line join table 220
E-140 Landmark line feature table 220
E-141 Buildings area join table 221
E-142 Buildings area feature table 221
E-143 Built-up area related attribute join table 224
E-144 Built-up area related attribute table 224
E-145 Built-up area join table 224
E-146 Built-up area area feature table 224
E-147 Fortification area join table 227
E-148 Fortification area feature table 227
E-149 Landmark area join table 228
E-150 Landmark area feature table 228
E-151 Mobile home area join table 229
E-152 Mobile home area feature table 229
E-153 Plaza area join table 230
E-154 Plaza area feature table 230
E-155 Ruins area join table 231
E-156 Ruins area feature table 231
E-157 Sport area join table 232
E-158 Sport area feature table 232
E-159 Population void collection area join table 233
E-160 Population void collection area feature table 233
E-161 Population text feature table 234
E-162 Population feature class attribute table 235
E-163 Population character value description table 237
E-164 Population integer value description table 242

E-165 Content and format for Surface Drainage coverage feature class schema table 249
E-166 Dam/Lock point feature table 251
E-167 Intake point feature table 253
E-168 Spring point feature table 254
E-169 Dam/Lock node feature table 255
E-170 Rapids node feature table 257
E-171 Spring node feature table 258
E-172 Surface drainage node feature table 259
E-173 Channel line join table 260
E-174 Channel line feature table 260
E-175 Dam line join table 267
E-176 Dam line feature table 267
E-177 Ford line join table 269

LIST OF TABLES - Continued

TABLE PAGE

E-178 Ford line feature table 269
E-179 Miscellaneous line join table 270
E-180 Miscellaneous line feature table 270
E-181 Penstock line join table 271
E-182 Penstock line feature table 271
E-183 Rapids line join table 272
E-184 Rapids line feature table 272
E-185 Channel area join table 273
E-186 Channel area feature table 273
E-187 Dam/lock area join table 280
E-188 Dam/lock area feature table 280
E-189 Lake reservoir area join table 282
E-190 Lake reservoir area feature table 282
E-191 Miscellaneous area join table 283
E-192 Miscellaneous area feature table 283
E-193 Surface Drainage void collection area join table 284
E-194 Surface Drainage void collection area feature table .. 284
E-195 Water area join table 285
E-196 Water area feature table 285
E-197 Surface Drainage text feature table 286
E-198 Surface Drainage feature class attribute table 287
E-199 Surface Drainage character value description table ... 289
E-200 Surface Drainage integer value description table 297

E-201 Content and format for surface configuration coverage feature class schema table 304
E-202 Channel area join table 305
E-203 Channel area feature table 305
E-204 Water area join table 306
E-205 Water area feature table 306
E-206 Slope area join table 307
E-207 Slope area feature table 307
E-208 Slope void collection area feature table 308
E-209 Slope/Surface configuration void collection area feature table 308
E-210 Slope/Surface configuration feature class attribute table..... 309
E-211 Slope/Surface configuration character value description table 310
E-212 Slope/Surface configuration integer value description table 312

E-213 Content and format for Soil/Surface materials coverage feature class schema table 313
E-214 Built-up area join table 314
E-215 Built-up area feature table 314
E-216 Channel area join table 315
E-217 Channel area feature table 315
E-218 Water area join table 316
E-219 Water area feature table 316

LIST OF TABLES - Continued

TABLE PAGE

E-220 Soil area join table 317
E-221 Soil area feature table 317
E-222 Soil void collection area join table 321
E-223 Soil void collection area feature table 321
E-224 Soil/Surface materials feature class attribute table.. 322
E-225 Soil/Surface materials character value description table 323
E-226 Soil/Surface materials integer value description table 326

E-227 Content and format for Transportation coverage feature class schema table..... 329
E-228 Aircraft facility point feature table..... 332
E-229 Harbor point feature table..... 333
E-230 Miscellaneous aeronautical point feature table..... 334
E-231 Bridge node feature table..... 335
E-232 Constriction node feature table..... 339
E-233 Ferry crossing node feature table..... 340
E-234 Ford node feature table..... 341
E-235 Mountain pass node feature table..... 342
E-236 Railroad turntable node feature table..... 342
E-237 Steep grade node feature table..... 343
E-238 Tunnel node feature table..... 344
E-239 Bridge line join table..... 346
E-240 Bridge line feature table..... 346
E-241 Ferry crossing line join table..... 349
E-242 Ferry crossing line feature table..... 349
E-243 Ford line join table..... 350
E-244 Ford line feature table..... 350
E-245 Harbor line join table..... 351
E-246 Harbor line feature table..... 351
E-247 Lift line join table 352
E-248 Lift line feature table 352
E-249 Railroad related join table 353
E-250 Railroad related attribute table 353
E-251 Railroad line join table..... 353
E-252 Railroad line feature table..... 354
E-253 Road related join table 356
E-254 Road related attribute table 356
E-255 Road line join table..... 356
E-256 Road line feature table..... 357
E-257 Track line join table..... 359
E-258 Track line feature table..... 359
E-259 Trail line join table..... 360
E-260 Trail line feature table..... 360
E-261 Tunnel line join table..... 361
E-262 Tunnel line feature table..... 361
E-263 Aircraft facility area join table..... 363
E-264 Aircraft facility area feature table..... 363
E-265 Harbor area join table..... 365

LIST OF TABLES - Continued

TABLE PAGE

E-266 Harbor area feature table..... 365
E-267 Rest area join table..... 367
E-268 Rest area feature table..... 367
E-269 Railroad yard area join table..... 368
E-270 Railroad yard area feature table..... 368
E-271 Runway area join table..... 369
E-272 Runway area feature table..... 369
E-273 Vehicle storage area join table..... 371
E-274 Vehicle storage area feature table..... 371
E-275 Transportation void collection area join table..... 372
E-276 Transportation void collection area feature table..... 372
E-277 Transportation text feature table..... 373
E-278 Transportation feature class attribute table..... 374
E-279 Transportation character value description table..... 376
E-280 Transportation integer value description table..... 385

E-281 Content and format for utilities coverage feature class schema table 392
E-282 Communication point feature table 393
E-283 Solar point feature table 394
E-284 Pumping point feature table 395
E-285 Substation point feature table 396
E-286 Communication node feature table 397
E-287 Pipeline crossing node feature table 398
E-288 Utility node feature table 399
E-289 Pipeline line join table 400
E-290 Pipeline line feature table 400
E-291 Power line join table 402
E-292 Power line feature table 402
E-293 Telephone line join table 403
E-294 Telephone line feature table 403
E-295 Communication area join table 404
E-296 Communication area feature table 404
E-297 Utility area join table 406
E-298 Utility area feature table 406
E-299 Utilities void collection area join table 408
E-300 Utilities void collection area feature table 408
E-301 Utilities text feature table 409
E-302 Utilities feature class attribute table 410
E-303 Utilities character value description table 412
E-304 Utilities integer value description table 416

LIST OF TABLES - Continued

TABLE PAGE

E-305 Content and format vegetation coverage feature class schema table..... 420
E-306 Barren area join table 421
E-307 Barren area feature table 421
E-308 Cropland area join table 422
E-209 Cropland area feature table 422
E-310 Grassland area join table 423
E-311 Grassland area feature table 423
E-312 Trees area join table 424
E-313 Trees area feature table 424
E-314 Built-up area join table 427
E-315 Built-up area feature table 427
E-316 Channel area join table 428
E-317 Channel area feature table 428
E-318 Water area join table 429
E-319 Water area feature table 429
E-320 Vegetation void collection area join table 430
E-321 Vegetation void collection area feature table 430
E-322 Vegetation feature class attribute table 431
E-323 Vegetation character value description table 432
E-324 Vegetation integer value description table 436

F-1 DTOP codes by coverage and feature type 438
F-2 DTOP attribute by FACC codes and feature type 444

G-1 Differences between DTOP and latest FACC 460

CONCLUDING MATERIAL

Custodian:
Air Force - 09
Army – TI
Navy – NO
Marine Corps - MC
DISA – DC2

Review Activities:
Air Force – 33
Navy – CG
DLA – DH
NSA – NS
NORAD - US

Preparing activity:
NIMA - MP

(Project MCGT-0371)

STANDARDIZATION DOCUMENT IMPROVEMENT PROPOSAL

INSTRUCTIONS

1. The preparing activity must complete blocks 1, 2, 3, and 8 and include as last page of document. In block 1, both the document number and revision letter should be given.
2. The submitter of this form must complete blocks 4, 5, 6, and 7, and submit to preparing activity.
3. The preparing activity must provide a reply within 30 days from receipt of the form.

NOTE: This form may not be used to request copes of documents, nor to request waivers, or clarification of requirements on current contracts. Comments submitted on this form do not constitute or imply authorization to waive any portion of the referenced document(s) or to amend contractual requirements.

I RECOMMEND A CHANGE:	1. DOCUMENT NUMBER MIL-PRF-89037A	2. DOCUMENT DATE *(YYMMDD)* 020801

3. **DOCUMENT TITLE**
Digital Topographic Data (DTOP)

4. **NATURE OF CHANGE** (Identify paragraph number and include proposed rewrite, if possible. Attach extra sheets as needed.)

5. REASON FOR RECOMMENDATION

6. SUBMITTER

a. NAME *(Last, First, Middle Initial)*	b. ORGANIZATION	
c. ADDRESS *(Include Zip Code)*	d. TELEPHONE *(Include Area Code)* (1) Commercial (2) *AUTOVON* *(If applicable)*	**7. DATE SUBMITTED** *(YYMMDD)*

8. PREPARING ACTIVITY

a. NAME National Imagery and Mapping Agency	b. TELEPHONE *(Include Area Code)* (1) Commercial (703) 262-4409 (2) AUTOVON 898-8539
c. ADDRESS *(Include ZIP Code)* National Imagery and Mapping Agency ATTN: Standards and Interoperability Office/PST, Mail Stop P-24 12310 Sunrise Valley Drive Reston, VA 20191-3449	**IF YOU DO NOT RECEIVE A REPLY WITHIN 45 DAYS, CONTACT:** Defense Standardization Program Office 8725 John J. Kingman Road, Suite 2533 Fort Belvoir, VA 22060-6879 Telephone: (703) 767-6888, DSN: 427-6888