NOTICE OF CHANGE

METRIC

MIL-STD-2411-1
NOTICE 1
16 AUGUST 2001

DEPARTMENT OF DEFENSE

INTERFACE STANDARD

REGISTERED DATA VALUES FOR RASTER PRODUCT FORMAT

TO ALL HOLDERS OF MIL-STD-2411-1:

1. THE FOLLOWING PAGES OF MIL-STD-2411-1 HAVE BEEN REVISED AND SUPERSEDE THE PAGES LISTED.

NEW PAGE	DATE	SUPERSEDED PAGE	DATE
Cover	16 August 2001	Cover	30 August 1994
ii	16 August 2001		30 August 1994
1	30 August 1994		Reprinted without change
2	16 August 2001	2	30 August 1994
7-8	30 August 1994	7-8	Reprinted without change
9	16 August 2001	9	30 August 1994
9a-b	16 August 2001	New page	
10	16 August 2001	10	30 August 1994
10a	16 August 2001	New page	
11	16 August 2001	11	30 August 1994
12	30 August 1994		Reprinted without change
21	16 August 2001	21	30 August 1994
22	30 August 1994		Reprinted without change
23	16 August 2001	23	30 August 1994
24	30 August 1994		Reprinted without change
32a,32b	16 August 2001	New pages	
33-37	16 August 2001	33-37	30 August 1994
37a,37b	16 August 2001	New pages	
38-39	30 August 1994		Reprinted without change
40	16 August 2001	40	30 August 1994

2. RETAIN THIS NOTICE AND INSERT BEFORE TABLE OF CONTENTS.

AMSC N/A **AREA MCGT**

DISTRIBUTION STATEMENT A. Approved for public release; distribution is unlimited.

3. Holders of MIL-STD-2411-1 will verify that page changes and additions indicated above have been entered. This notice page will be retained as a check sheet. This issuance, together with appended pages, is a separate publication. Each notice is to be retained by stocking points until the standard is completely revised or canceled.

Custodians:		Preparing activity:
Air Force -	09	NIMA - MP
Army -	TI	
Navy -	NO	
Marine Corps -	MC	(Project MCGT-0340)
DISA	DC2	

METRIC

MIL-STD-2411-1

30 AUGUST 1994

DEPARTMENT OF DEFENSE INTERFACE STANDARD

REGISTERED DATA VALUES FOR RASTER PRODUCT FORMAT

ASMC N/A AREA MCGT

DISTRIBUTION STATEMENT A. Approved for public release: distribution is unlimited.

SUPERSEDES COVER OF MIL-STD-2411-1

DEPARTMENT OF DEFENSE

1. This Military Standard is approved for use by all Departments and Agencies of the Department of Defense.

2. Beneficial comments (recommendations, additions, deletions) and any pertinent data which may be of use in improving this document should be addressed to: NIMA Operational Help Desk: 1-800-455-0899; Commercial 314-263-4864; DSN 693-4864; or write to : Director National Imagery and Mapping Agency, ATTN: DF, P-37, 4600 Sangamore Road, Bethesda MD 20816-5003.

SUPERSEDES PAGE ii OF MIL-STD-2411

1. SCOPE

1.1 Scope. This document is a companion document to the military standard for Raster Product Format (RPF), MIL-STD-2411. It contains all registered data values referenced in the standard.

1.2 Purpose. This document is intended to supply producers and users of RPF products with the registered data values necessary to produce and interpret RPF data.

1.3 Application. The Military Departments, Office of the Secretary of Defense, Organizations of the Joint Chiefs of Staff, and the Defense Agencies of the Department of Defense (collectively known as DoD components) shall use the information in this document in preparing and accessing digital geographic data required or specified to be in RPF.

1.4 Security. This standard is UNCLASSIFIED. The registered data values presented herein may be used for classified processing where appropriate security provisions are added.

2. APPLICABLE DOCUMENTS

2.1 Government documents.

2.2.1 Specifications, standards, and handbooks. The following specifications, standards, and handbooks form a part of this document to the extent specified herein. Unless otherwise specified, the issues of these documents are those listed in the current Department of Defense Index of Specification and Standards (DODISS).

MIL-STD-2411 Military Standard for Raster Product Format, with Change Notice 2

(Unless otherwise indicated, copies of federal and military specifications, standards, and handbooks are available from the Standardization Documents Order Desk, Bldg. 4D, 700 Robbins Avenue, Philadelphia, PA 19111-5094.)

2.1.2 Other Government documents, drawings, and publications. The following other government documents, drawings and publications form a part of this document to the extent specified herein. Unless otherwise specified, the issues are those cited in the solicitation.

a. DIAM 65-19, Defense Intelligence Agency Standard Security Markings.

(Applications for copies should be addressed to Headquarters, Defense Intelligence Agency, Central Reference Division, Compartmented Reference Archive, ATTN: RTS-2E3, Wash., DC 20301.)

b. DMA Technical Manual, DMA TM 8358.1, Defense Mapping Agency: Datums, Ellipsoids, Grids, and Grid Reference Systems, Preliminary Edition.

(Applications for DMA TR copies should be addressed to National Imagery and Mapping Agency, ATTN: NIMA Customer Support COD, Mail Stop P-38, 12310 Sunrise Valley Drive, Reston, VA 20191-3449)

2.2 Non-Government publications. This section is not applicable to this standard.

2.3 Order of precedence. In the event of a conflict between the text of this document and the references cited herein (except for related associated detail specification sheets, or military sheet standards) the text of this document takes precedence. Nothing in this document, however, supersedes applicable laws and regulations unless a specific exemption has been obtained.

SUPERSEDES PAGE 2 OF MIL-STD-2411-1

Monochromatic (M), and Cyan Magenta Yellow, Black(CMYK), which is often used in color printing.

<color/grayscale table id>	Description
1	RGB
2	RGBM
3	M
4	CMYK
5-65535	Reserved for future standardization

5.1.2.2 Color conversion codes. The color conversion table maps the colors from one color/grayscale table into another color/grayscale table. If a user is unable, or does not choose, to use the primary color/grayscale table in an RPF file, the color conversion table can be used to map the primary colors into the closest matching colors within the alternate table. These names used to describe the <color/grayscale table id>s begin with the letters CCT/. The number immediately after the slash (/) is the <color/grayscale table id> of the primary color table, and the number after the arrow (->) is the alternate color table id. In cases where the primary and alternate color tables contain the same color planes, the numbers after the slashes will be the same. In these cases, the color converter table is often used to map a larger number of colors in the primary color table to a smaller number of colors in the alternate color table.

a. In an example use of a color conversion table, assume that an RPF file has two <color/grayscale tables id>s and one <color converter table id>. The two [color/grayscale table] are RGBM (<color/grayscale table id> = 2) and therefore the appropriate [color converter table] would map the primary RGBM into the alternate RGBM, (<color converter table id> = 5). The color conversion table is a mapping of the colors from the primary RGBM color table to the alternate RGBM color table as in figure 1. A call to display color X from the primary color table is routed to the color conversion table, where the index of X is mapped to the index of Y, a color in the alternate color table.

<color converter table id>	Description
1	CCT/1->1
2	CCT/1->2
3	CCT/1->3
4	CCT/1->4
5	CCT/2->2
6	CCT/2->3
7	CCT/2->4
8	CCT/3->3
10-65535	Reserved for future standardization

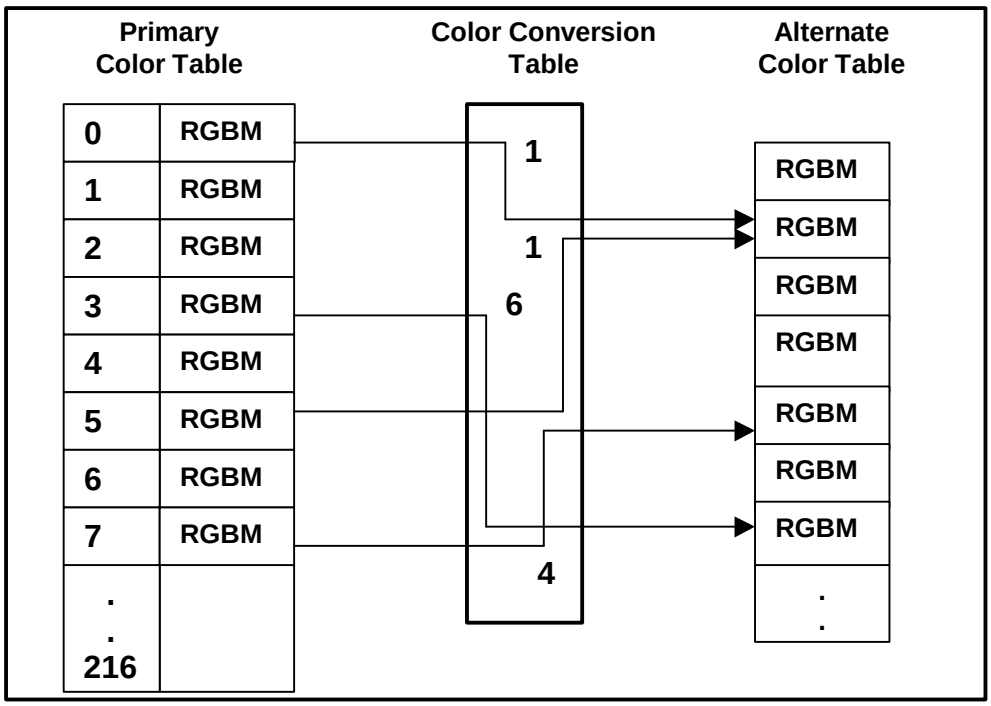

Figure 1. Color mapping between primary and alternate color tables.

5.1.3 Zone codes for ARCed data. Zone codes are used in conjunction with the data series codes (5.1.4) to construct the <data series and zone> codes in 5.1.5. For products where zone code and/or data series is not applicable, the <data series and zone codes> shall consist of a 3-byte descriptor applicable to a particular product. No <data series and zone codes> are currently registered for such products.

Zone Number	Equatorward Latitude	Midpoint Latitude	Poleward Latitude
1,A	0°	22.94791772°	32°
2,B	32°	41.12682127°	48°
3,C	48°	52.28859923°	56°
4,D	56°	60.32378942°	64°
5,E	64°	66.09421768°	68°
6,F	68°	70.10896259°	72°
7,G	72°	74.13230145°	76°
8,H	76°	78.17283750°	80°
9,J	80°	——	90°

5.1.3.1 Zone codes for DTED data. Zone codes are used in conjunction with the data series codes (5.1.4) to construct the <data series and zone> codes in 5.1.5. The zone codes for RPF data that is zoned similar to DTED data have the following zone codes.

Zone Number	Equatorward Latitude	Poleward Latitude
1,6	0°	50°
2,7	50°	70°
3,8	70°	75°
4,9	75°	80°
5,A	80°	90°

5.1.4 Data series codes. The data series codes are used in conjunction with the zone codes (5.1.3) to construct the <data series and zone> Codes in 5.1.5. The specific methodology for creating the data series and zone codes is described in MIL-STD-2411.

Series Code	Series Abbr.	Scale /resolution	Data series	RPF data type
GN	GNC	1:5,000,000	Global Navigation Chart	CADRG
JN	JNC	1:2,000,000	Jet Navigation Chart	CADRG
OH	VHRC	1:1,000,000	VFR Helicopter Route Chart	CADRG
ON	ONC	1:1,000,000	Operational Navigation Chart	CADRG
OW	WAC	1:1,000,000	High Flying Chart - Host Nation	CADRG
TP	TPC	1:500,000	Tactical Pilotage Chart	CADRG
LF	LFC-FR (Day)	1:500,000	Low Flying Chart (Day)- Host Nation	CADRG
L1	LFC-1	1:500,000	Low Flying Chart (TBD #1)	CADRG
L2	LFC-2	1:500,000	Low Flying Chart (TBD #2)	CADRG
L3	LFC-3	1:500,000	Low Flying Chart (TBD #3)	CADRG
L4	LFC-4	1:500,000	Low Flying Chart (TBD #4)	CADRG
L5	LFC-5	1:500,000	Low Flying Chart (TBD #5)	CADRG
LN	LFC (Night)	1:500,000	Low Flying Chart (Night) - Host Nation	CADRG
JG	JOG	1:250,000	Joint Operations Graphic	CADRG
JA	JOG-A	1:250,000	Joint Operations Graphic - Air	CADRG
JR	JOG-R	1:250,000	Joint Operations Graphic - Radar	CADRG

Series Code	Series Abbr.	Scale /resolution	Data series	RPF data type
JO	OPG	1:250,000	Operational Planning Graphic	CADRG
VT	VTAC	1:250,000	VFR Terminal Area Chart	CADRG
F1	TFC-1	1:250,000	Transit Flying Chart (TBD #1)	CADRG
F2	TFC-2	1:250,000	Transit Flying Chart (TBD #2)	CADRG
F3	TFC-3	1:250,000	Transit Flying Chart (TBD #3)	CADRG
F4	TFC-4	1:250,000	Transit Flying Chart (TBD #4)	CADRG
F5	TFC-5	1:250,000	Transit Flying Chart (TBD #5)	CADRG
AT	ATC	1:200,000	Series 200 Air Target Chart	CADRG
VH	HRC	1:125,000	Helicopter Route Chart	CADRG
TN	TFC (Night)	1:250,000	Transit Flying Chart(Night)- Host nation	CADRG
TR	TLM200	1:200,000	Topographic Line Map 1:200,000 scale	CADRG
TC	TLM 100	1:100,000	Topographic Line Map 1:100,0000 scale	CADRG
RV	Riverine	1:50,000	Riverine Map 1:50,000 scale	CADRG
TL	TLM 50	1:50,000	Topographic Line Map	CADRG
UL	TLM50-Other	1:50,000	Topographic Line Map (other 1:50,000 scale)	CADRG
TT	TLM25	1:25,000	Topographic Line Map 1:25,000 scale	CADRG
TQ	TLM24	1:24,000	Topographic Line Map 1:24,000 scale	CADRG
HA	HA	Various	Harbor and Approach Charts	CADRG
CO	CO	Various	Coastal Charts	CADRG
OA	OPAREA	Various	Naval Range Operating Area Chart	CADRG
CG	CG	Various	City Graphics	CADRG
C1	CG	1:10,000	City Graphics	CADRG
C2	CG	1:10,560	City Graphics	CADRG
C3	CG	1:11,000	City Graphics	CADRG
C4	CG	1:11,800	City Graphics	CADRG
C5	CG	1:12,000	City Graphics	CADRG
C6	CG	1:12,500	City Graphics	CADRG
C7	CG	1:12,800	City Graphics	CADRG
C8	CG	1:14,000	City Graphics	CADRG
C9	CG	1:14,700	City Graphics	CADRG
CA	CG	1:15,000	City Graphics	CADRG
CB	CG	1:15,500	City Graphics	CADRG
CC	CG	1:16,000	City Graphics	CADRG
CD	CG	1:16,666	City Graphics	CADRG
CE	CG	1:17,000	City Graphics	CADRG
CF	CG	1:17,500	City Graphics	CADRG

NEW PAGE

Series Code	Series Abbr.	Scale /resolution	Data series	RPF data type
CH	CG	1:18,000	City Graphics	CADRG
CJ	CG	1:20,000	City Graphics	CADRG
CK	CG	1:21,000	City Graphics	CADRG
CL	CG	1:21,120	City Graphics	CADRG
CN	CG	1:22,000	City Graphics	CADRG
CP	CG	1:23,000	City Graphics	CADRG
CQ	CG	1:25,000	City Graphics	CADRG
CR	CG	1:26,000	City Graphics	CADRG
CS	CG	1:35,000	City Graphics	CADRG
CT	CG	1:36,000	City Graphics	CADRG
CM	CM	Various	Combat Charts	CADRG
A1	CM	1:10,000	Combat Charts, 1:10,000 scale	CADRG
A2	CM	1:25,000	Combat Charts, 1:25,000 scale	CADRG
A3	CM	1:50,000	Combat Charts, 1:50,000 scale	CADRG
A4	CM	1:100,000	Combat Charts, 1:100,000 scale	CADRG
MI	MIM	1:50,000	Military Installation Maps	CADRG
M1	MIM	Various	Military Installation Map (TBD #1)	CADRG
M2	MIM	Various	Military Installation Map (TBD #2)	CADRG
VN	VNC	1:500,000	Visual Navigation Charts	CADRG
MM	---	Various	(Miscellaneous Maps & Charts)	CADRG
I1	---	10m	Imagery, 10 meter resolution	CIB
I2	---	5m	Imagery, 5 meter resolution	CIB
I3	---	2m	Imagery, 2 meter resolution	CIB
I4	---	1m	Imagery, 1 meter resolution	CIB
I5	---	.5m	Imagery, .5 (half) meter resolution	CIB
IV	---	Various>10m	Imagery, greater than 10 meter resolution	CIB
D1 *	---	100m	Elevation Data from DTED level 1	CDTED
D2 *	---	30m	Elevation Data from DTED level 2	CDTED

* See note in paragraph 5.

NEW PAGE

5.1.5 Data series and zone codes. The <data series and zone> codes are three digit alphanumeric codes derived from the two digit Data Series Code (see 5.1.4) and the one digit Zone Code (see 5.1.3). The following are *examples* of valid codes currently defined for RPF data. Other valid <data series and zone> codes (for city graphics, etc.) can be created by combining data series codes with the ARC zone codes in the same fashion.

NORTHERN HEMISPHERE

Data series	ARC ZONE 1	2	3	4	5	6	7	8	9
GN	GN1	GN2	GN3	GN4	---	---	GN7	---	GN9
JN	JN1	JN2	JN3	JN4	JN5	JN6	JN7	JN8	JN9
ON	ON1	ON2	ON3	ON4	ON5	ON6	ON7	ON8	ON9
TP	TP1	TP2	TP3	TP4	TP5	TP6	TP7	TP8	TP9
LF	LF1	LF2	LF3	LF4	LF5	LF6	LF7	LF8	LF9
JG	JG1	JG2	JG3	JG4	JG5	JG6	JG7	JG8	JG9
JA	JA1	JA2	JA3	JA4	JA5	JA6	JA7	JA8	JA9
JR	JR1	JR2	JR3	JR4	JR5	JR6	JR7	JR8	JR9
TF	TF1	TF2	TF3	TF4	TF5	TF6	TF7	TF8	TF9
AT	AT1	AT2	AT3	AT4	AT5	AT6	AT7	AT8	AT9
TC	TC1	TC2	TC3	TC4	TC5	TC6	TC7	TC8	TC9
TL	TL1	TL2	TL3	TL4	TL5	TL6	TL7	TL8	TL9
TT	TT1	TT2	TT3	TT4	TT5	TT6	TT7	TT8	TT9
TQ	TQ1	TQ2	TQ3	TQ4	TQ5	TQ6	TQ7	TQ8	TQ9
CG	CG1	CG2	CG3	CG4	CG5	CG6	CG7	CG8	CG9
CM	CM1	CM2	CM3	CM4	CM5	CM6	CM7	CM8	CM9
A1	A11	A12	A13	A14	A15	A16	A17	A18	A19
A2	A21	A22	A23	A24	A25	A26	A27	A28	A29
A3	A31	A32	A33	A34	A35	A36	A37	A38	A39
MI	MI1	MI2	MI3	MI4	MI5	MI6	MI7	MI8	MI9
VN	VN1	VN2	VN3	VN4	VN5	VN6	VN7	VN8	VN9
I1	I11	I12	I13	I14	I15	I16	I17	I18	I19
I2	I21	I22	I23	I24	I25	I26	I27	I28	I29
I3	I31	I32	I33	I34	I35	I36	I37	I38	I39
I4	I41	I42	I43	I44	I45	I46	I47	I48	I49
IV	IV1	IV2	IV3	IV4	IV5	IV6	IV7	IV8	IV9

SOUTHERN HEMISPHERE

Data series	ARC ZONE A	B	C	D	E	F	G	H	J
GN	GNA	GNB	GNC	GND	---	---	GNG	---	GNJ
JN	JNA	JNB	JNC	JND	JNE	JNF	JNG	JNH	JNJ
ON	ONA	ONB	ONC	OND	ONE	ONF	ONG	ONH	ONJ
TP	TPA	TPB	TPC	TPD	TPE	TPF	TPG	TPH	TPJ
LF	LFA	LFB	LFC	LFD	LFE	LFF	LFG	LFH	LFJ
JG	JGA	JGB	JGC	JGD	JGE	JGF	JGG	JGH	JGJ
JA	JAA	JAB	JAC	JAD	JAE	JAF	JAG	JAH	JAJ
JR	JRA	JRB	JRC	JRD	JRE	JRF	JRG	JRH	JRJ
TF	TFA	TFB	TFC	TFD	TFE	TFF	TFG	TFH	TFJ
AT	ATA	ATB	ATC	ATD	ATE	ATF	ATG	ATH	ATJ
TC	TCA	TCB	TCC	TCD	TCE	TCF	TCG	TCH	TCJ
TL	TLA	TLB	TLC	TLD	TLE	TLF	TLG	TLH	TLJ
TT	TTA	TTB	TTC	TTD	TTE	TTF	TTG	TTH	TTJ
TQ	TQA	TQB	TQC	TQD	TQE	TQF	TQG	TQH	TQJ
CG	CGA	CGB	CGC	CGD	CGE	CGF	CGG	CGH	CGJ
CM	CMA	CMB	CMC	CMD	CME	CMF	CMG	CMH	CMJ
A1	A1A	A1B	A1C	A1D	A1E	A1F	A1G	A1H	A1J
A2	A2A	A2B	A2C	A2D	A2E	A2F	A2G	A2H	A2J
A3	A3A	A3B	A3C	A3D	A3E	A3F	A3G	A3H	A3J
MI	MIA	MIB	MIC	MID	MIE	MIF	MIG	MIH	MIJ
VN	VNA	VNB	VNC	VND	VNE	VNF	VNG	VNH	VNJ
I1	I1A	I1B	I1C	I1D	I1E	I1F	I1G	I1H	I1J
I2	I2A	I2B	I2C	I2D	I2E	I2F	I2G	I2H	I2J
I3	I3A	I3B	I3C	I3D	I3E	I3F	I3G	I3H	I3J
I4	I4A	I4B	I4C	I4D	I4E	I4F	I4G	I4H	I4J
IV	IVA	IVB	IVC	IVD	IVE	IVF	IVG	IVH	IVJ

The following are the valid <data series and zone> codes currently defined for RPF data that are zoned in the DTED zone format.

NORTHERN and SOUTHERN HEMISPHERE

Data series	DTED ZONE 1	2	3	4	5	6	7	8	9	A
D1 *	D11	D12	D13	D14	D15	D16	D17	D18	D19	D1A
D2 *	D21	D22	D23	D24	D25	D26	D27	D28	D29	D2A

* See note in paragraph 5

NEW PAGE

In addition, the following are valid <data series and zone> codes for the specified frame file types:

File Type	<data series and zone> code
Overview Images	OVR
Legend Files	LGD

5.1.6 Product data types. The following are the valid <product data type>s currently registered for RPF products.

Product Data Type	Product Name
ADRG	ARC Digitized Raster Graphic
ADRI	ARC Digital Raster Imagery
CADRG	Compressed ARC Digitized Raster Graphics
CIB	Controlled Image Base
CDTED *	Compressed Digital Terrain Elevation Data
DTED *	Digital Terrain Elevation Data

* See note in paragraph 5.

5.1.7 Security country/international codes. The following are the registered <security country/international codes> for RPF products.

Code	Description
AB	Abu Musa (Disputed Island in Persian Gulf)
AF	Afghanistan
AL	Albania
AG	Algeria
AQ	American Samoa (US)
ZQ	Andaman Islands (IN)
AN	Andorra
AO	Angola
AV	Anquilla (Leeward Islands) (UK)
YR	Annobon (Pagulu) (EK)
AY	Antarctica
AC	Antiqua-Barbuda
AR	Argentina
AM	Armenia
AA	Aruba (NL)
AT	Ashmore & Cartier Islands (AS)
AS	Australia
AU	Austria
AJ	Azerbaijan
AZ	Azores
BF	Bahama Islands
BA	Bahrain
FQ	Baker Islands (SP)
BG	Bangladesh

5.2.1 Producer codes The following are the valid <producer code>s currently registered for RPF products.

ID	Producer code	Producer
1	AFACC	Air Force Air Combat Command
2	AFESC	Air Force Electronic Systems Center
3	NIMA	National Imagery and Mapping Agency, Primary
4	NIMA1	NIMA, Alternate Site 1
5	NIMA2	NIMA, Alternate Site 2
6	NIMA3	NIMA, Alternate Site 3
7	SOCAF	Air Force Special Operations Command
8	SOCOM	United States Special Operations Command
9	PACAF	Pacific Air Forces
A	USAFE	United States Air Force, Europe
B	Non-DoD (NonDD)	US producer outside the Department of Defense
C	Non-US (NonUS)	Non-US producer
D	NIMA DCHUM (DCHUM)	NIMA produced Digital CHUM file
E	Non-NIMA DCHUM (DCHMD)	DoD producer of Digital CHUM file other than NIMA
F	Non-US DCHUM (DCHMF)	Non-US (foreign)producer of Digital CHUM files
G	Non-DoD DCHUM (DCHMG)	US producer of Digital CHUM files outside DoD
H	IMG2RPF	Non-specified, Imagery formatted to RPF
I-Z		Reserved for future standardization

5.2.2 Compression ratio codes. The compression ratio code is as ASCII field within the [table of contents] file of RPF products. Examples of text that may be found in this field are given below.

Code	Description
55:1	Digital product compressed approximately 55:1 with respect to the uncompressed data
12:1	Digital product compressed approximately 12:1 with respect to the uncompressed data
48:1	Digital product compressed approximately 48:1 with respect to the uncompressed data
UNC	Uncompressed RPF product
VAR	Variable compression ratio

5.3 Frame file data. This section defines codes that are used in the RPF [frame file].

5.3.1 Compression section. RPF data can be in a compressed or uncompressed format. This compression section defines valid codes for compression scheme parameters.

5.3.1.1 Compression algorithm ID. The following are the valid <compression algorithm id>s currently registered for RPF products.

ID	Compression Algorithm
1	VQ
2	JPEG lossless *
3-65535	Reserved for future standardization

* See note in paragraph 5.

5.3.1.2 Compression lookup table ID. The following are the valid <compression lookup table id>s currently registered for RPF products.

ID	Compression Lookup Table
1	1x4 Row 0 VQ
2	1x4 Row 1 VQ
3	1x4 Row 2 VQ
4	1x4 Row 3 VQ
5	4x4 VQ
6	2x2 VQ
7	Huffman Code *
8	Length of Huffman Code *
9	Huffman Value *
10-65535	Reserved for future standardization

* See note in paragraph 5.

5.3.1.3 Compression parameter ID. The <compression parameter id> is a code which identifies parameters which may be used in the [compression section] of an RPF [frame file]. Not all compression schemes require <compression parameter id>s.

ID	Compression Parameter
1	JPEG data stream for Huffman table structure *
2-65535	Reserved for future standardization

5.3.1.4 Compression parameter value. The <compression parameter value> can be either an explicit value to be used in a compression scheme or an index to a table used in the compression of RPF [frame file]s. Not all compression schemes require <compression parameter value>s. Currently no <compression parameter value>s are registered.

5.3.2 Attribute section. The [attribute section in RPF products defines ancillary or qualifying information about the data within the [frame file]s. The following tables list currently registered attributes and parameters for RPF products.

Attr ID	Attribute Description	Number of Parameters
1	Currency Date	1
2	Production Date	1
3	Significant Date	1
4	Map/Chart Source	4
5	Projection System	5
6	Vertical Datum	1
7	Horizontal Datum	1
8	Vertical Absolute Accuracy	2
9	Horizontal Absolute Accuracy	2
10	Vertical Relative Accuracy	2
11	Horizontal Relative Accuracy	2
12	Ellipsoid	1
13	Sounding Datum	1
14	Navigation System	1
15	Grid	1
16	Easterly Annual Magnetic Change	2
17	Westerly Annual Magnetic Change	2
18	Grid North-Magnetic North Angle	2
19	Grid Convergence Angle	2
20	Highest Known Elevation	4
21	Multiple Legend	1
22	Image Source	2
23*	Data Level	1
24	Chart Update Information	7
25	Contour Interval	2

* See note in paragraph 5.

5.3.2.1 Attribute and parameter descriptions. The following are the valid parameters associated with attributes listed above and currently registered for RPF products.

Currency Date (ID ::= 1)

Parameter ID	1	**Description**
Parameter Name	Currency Date	Date of most recent revision to the RPF product in the [frame file], in the form YYYYMMDD
Data Type	Asci:8	

Currency Date (ID ::= 2)

Parameter ID	2	**Description**
Parameter Name	Production Date	Date that the source data was transformed to RPF format, in the form YYYYMMDD
Data Type	Asci:8	

Currency Date (ID ::= 3)

Parameter ID	3	**Description**
Parameter Name	Significant Date	Date that most accurately describes the basic date of the source product, in the form YYYYMMDD. It can be the completion date, compilation date, collection date, revision date, or other date depending on the product and circumstances.
Data Type	Asci:8	

Chart Update Information (ID : := 24)

Parameter ID	1	**Description** The total number of updates associated with this [frame file]
Parameter Name	Number of Updates	
Data Type	Uint:2	
Parameter ID	2	**Description** The sequence number of this update
Parameter Name	Update Number	
Data Type	Uint:2	
Parameter ID	3	**Description** The date associated with the update. This date is the date found in the ECHUM information, in the form YYYYMMDD
Parameter Name	Update Date	
Data Type	asci:8	
Parameter ID	4	**Description** The number of subframes impacted by this update
Parameter Name	Number of Subframes Impacted	
Data Type	uint:2	
Parameter ID	5	**Description** An array of integers representing the list of subframes affected by the change. Each entry in the array is 2 bytes and the number of entries is specified by the "number of subframes", indicated by parameter 4.
Parameter Name	List of subframes	
Data Type	(uint:2) x (value of parameter 4)	

NEW PAGE

Parameter ID	6	**Description**
Parameter Name	Number of Characters in Description	The number of characters in the description of the change
Data Type	uint:2	
Parameter ID	7	**Description**
Parameter Name	Change Description	A description of the change, as described in the ECHUM information. The length of this description is specified by the "Number of Characters in Description" indicated by parameter 6
Data Type	asci: var	

Contour Interval (ID ::= 25)

Parameter ID	1	**Description**
Parameter Name	Contour Interval	Contour interval of the map or chart
Data Type	Uint:2	
Parameter ID	2	**Description**
Parameter Name	unit of measurement	Unit of measurement for the Contour interval as specified in Section 5.3.2.6
Data Type	Uint:2	

NEW PAGE

5.3.2.2 Datum codes. The following are the valid datum codes currently registered for RPF products, and as taken from DMA TECH Manual 8358.1.

Horizontal Datum Codes

Code	Name (Region)
ADIM	Adindan (Mean value: Ethiopia and Sudan)
ADIA	Adindan (Ethiopia)
ADIB	Adindan (Sudan)
ADIC	Adindan (Mali)
ADID	Adindan (Senegal)
ADIF	Adindan (Cameroon)
ADIE	Adindan (Burkina Faso)
AFG	Afgooye (Somalia)
AINA	Ain el Abd 1970 (Bahrain Island)
AINB	Ain el Abd 1970 (Saudi Arabia)
AIA	Antigua Island Astro 1943 Antigua (Leeward Islands)
ANO	Anna 1 Astro 1965 (Cocos Islands)
ARFM	Arc 1950 (Mean value: Botswana, Lesotho, Malawi, Swaziland, Zaire, Zambia, and Zimbabwe)
ARFA	Arc 1950 (Botswana)
ARFB	Arc 1950 (Lesotho)
ARFD	Arc 1950 (Swaziland)
ARFE	Arc 1950 (Zaire)
ARFF	Arc 1950 (Zambia)
ARFG	Arc 1950 (Zimbabwe)
ARFH	Arc 1950 (Burundi)
ARFC	Arc 1950 (Malawi)
ARSM	Arc 1960 (Mean value: Kenya, Tanzania)
ASC	Ascension Island 1958 (Ascension Island)
ATF	Astro Beacon "E" 1945 (Iwo Jima Island)
TRN	Astro Tern Island (FRIG) 1961 (Tern Island Hawaii)
SHB	Astro DOS 71/4 (St. Helena Island)
ASQ	Astronomical Station 1952 (Marcus Island)
AUA	Australian Geodetic 1966 (Australia and Tasmania Is.)
AUG	Australian Geodetic 1984 (Australia and Tasmania Is.)
PHA	Ayabelle Lighthouse (Djibouti)
IBE	Bellevue (IGN) (Efate and Erromango Islands)
BER	Bermuda 1957 (Bermuda Islands)
BID	Bissau (Guinea-Bissau)
BOO	Bogota Observatory (Colombia)
BUR	Bukit Rimpah (Bangka and Belitung Islands, Indonesia)
CAZ	Camp Area Astro (Camp McMurdo Area, Antarctica)
CAI	Campo Inchauspe (Argentina)
CAO	Canton Astro 1966 (Phoenix Islands)
CAP	Cape (South Africa)

SUPERSEDES PAGE 33 OF MIL-STD-2411-1

CAC	Cape Canaveral (Mean value: Florida and Bahama Islands)
CGE	Carthage (Tunisia)
CHI	Chatham Island Astro 1971 (Chatham Island, New Zealand)
CHU	Chua Astro (Paraguay)
COA	Corrego Alegre (Brazil)
DAL	Dabola (Guinea)
BAT	Djakarta (Batavia) Sumatra Island, Indonesia)
GIZ	DOS 1968 (Gizo Island, New Georgia Islands)
EAS	Easter Island 1967 (Easter Island)
EURM	European 1950 (Mean Value: Austria, Belgium, Denmark, Finland, France, Federal Republic of Germany, Gibraltar, Greece, Italy, Luxembourg, Netherlands, Norway, Portugal, Spain, Sweden and Switzerland)
EURA	European 1950 (Mean Value for Western Europe: Austria, Denmark, France, Federal Republic of Germany, Netherlands, and Switzerland)
EURS	European 1950 (Mean Value: Iraq, Israel, Jordan, Lebanon, Kuwait, Saudi Arabia, Syria)
EURB	European 1950 (Greece)
EURC	European 1950 (Norway and Finland)
EURD	European 1950 (Portugal and Spain)
EURE	European 1950 (Cyprus)
EURF	European 1950 (Egypt)
EURH	European 1950 (Iran)
EURI	European 1950 (Italy Sardinia)
EURJ	European 1950 (Italy Sicily)
EURK	European 1950 (England, Channel Islands, Ireland, Northern Ireland, Scotland, Shetland Islands, and Wales)
EURL	European 1950 (Malta)
EUS	European 1979 (Mean value: Austria, Finland, Netherlands, Norway, Spain, Sweden, and Switzerland)
FOT	Fort Thomas 1955 (Nevis, Saint Kitts, Leeward Islands)
GAA	GAN Datum 1970 (Addu Atoll, Republic of Maldives)
GEO	Geodetic Datum 1949 (New Zealand)
GUA	Guam 1963 (Guam Island)
GSE	Gunung Segara (Kalimantan Island, Indonesia)
DOB	GUX 1 Astro (Guadalcanal Island)
HEN	Herat (North Afghanistan)
HJO	Hjorsey 1955 (Iceland)
HKD	Hong Kong 1963 (Hong Kong)
HTN	Hu-Tzu-Shan (Taiwan)
INFA	Indian 1954 (Thailand and Vietnam)
INHA	Indian 1975 (Thailand)
INDI	Indian (India, and Nepal)
INDB	Indian (Bangladesh)
IRL	Ireland 1965 (Ireland and Northern Ireland)

SUPERSEDES PAGE 34 OF MIL-STD-2411-1

ISG	ISTS 061 Astro 1968 (South Georgia Islands)
IST	ISTS 073 Astro 1969 (Diego Garcia)
JOH	Johnston Island 1961 (Johnston Island)
KAN	Kandawala (Sri Lanka)
KEG	Kerguelen Island 1949 (Kerguelen Island)
KEA	Kertau 1948 (West Malaysia and Singapore)
KUS	Kusaie Astro 1951 (Caroline Islands)
LCF	L.C. 5 Astro 1961 (Cayman Brac Island)
LEH	Leigon (Ghana)
LIB	Liberia 1964 (Liberia)
LUZB	Luzon (Mindanao Island, Phillipines)
LUZA	Luzon (Philippines except Mindanao Island)
MPO	M’Poraloko (Gabon)
MIK	Mahe 1971 (Mahe Island)
MAR	Marco Astro (Salvage Islands)
MAS	Massawa (Eritrea, Ethiopia)
MER	Merchich (Morocco)
MID	Midway Astro 1961 (Midway Island)
MINA	Minna (Cameroon)
MIN	Minna (Nigeria)
ASM	Montserrat Island Astro 1958 (Montserrat, Leeward Islands)
NAHA	Nahrwan (Masirah Island, Oman)
NAHB	Nahrwan (United Arab Emirates)
NAHC	Nahrwan (Saudi Arabia)
NAP	Naparima (BWI Trinidad and Tobago)
NAS	North American 1927 (Mean Value)
NASC	North American 1927 (Mean value: CONUS)
NASA	North American 1927 (Eastern US)
NASB	North American 1927 (Western US)
NASD	North American 1927 (Alaska)
NASQ	North American 1927 (Bahamas, except San Salvador Island)
NASR	North American 1927 (Bahamas San Salvador Island)
NASE	North American 1927 (Mean value: Canada)
NASF	North American 1927 (Canada Alberta and British Columbia)
NASG	North American 1927 (Canada Newfoundland, New Brunswick, Nova Scotia, and Quebec)
NASH	North American 1927 (Canada Manitoba and Ontario)
NASI	North American 1927 (Canada Northwest Territories and Saskatchewan)
NASJ	North American 1927 (Canada Yukon)
NASO	North American 1927 (Canal Zone)

NASP	North American 1927 (Antigua, Barbuda, Barbados, Caribbean, Caicos Islands, Cuba, Dominican Republic, Grand Cayman, Jamaica, Leeward Islands, and Turks Islands)
NASN	North American 1927 (Central America - Belize, Costa Rica, El Salvador, Guatemala, Honduras, and Nicaragua)
NAST	North American 1927 (Cuba)
NASU	North American 1927 (Hayes, Peninsula, Greenland)
NASL	North American 1927 (Mexico)
NAR	North American 1983 (Mean Value: Alaska, Canada, CONUS, Mexico, and Central America)
FLO	Observatorio Metereologico 1939(Corvo and Flores Islands, Azores)
OEG	Old Egyptian 1907 (Egypt)
OHAM	Old Hawaiian (Mean value)
OHAA	Old Hawaiian (Hawaii)
OHAB	Old Hawaiian (Kauai)
OHAC	Old Hawaiian (Maui)
OHAD	Old Hawaiian (Oahu)
FAH	Oman (Oman)
OGBM	Ord. Survey G. B. 1936 (Mean Value: England, Isle of Man, Scotland, Shetland, and Wales)
OGBA	Ord. Survey G.B. 1936 (England)
OGBB	Ord. Survey G. B. 1936 (England, Isle of Man, and Wales)
OGBC	Ord. Survey G.B. 1936 (Scotland and Shetland Islands)
OGBD	Ord. Survey G. B. 1936 (Wales)
PLN	Pico de las Nieves (Canary Islands)
PIT	Pitcairn Astro 1967 (Pitcairn Island)
PTB	Point 58 (Mean value: Burkina Faso and Niger)
PTN	Pointe Noire 1948 (Congo)
POS	Porto Santo 1936 (Porto Santo, Madeira Islands)
HIT	Prov. S. Chilean 1963 (S. Chile, 53 S.) (Hito XVIII)
PRPM	Prov. S. Amer. 1956 (Mean value: Bolivia, Chile, Colombia, Ecuador, Guyana, Peru and Venezuela)
PRPB	Prov. S. Amer. 1956 (Northern Chile near 19 degrees south)
PRPC	Prov. S. Amer. 1956 (Southern Chile near 43 degrees south)
PRPD	Prov. S. Amer. 1956 (Columbia)
PRPE	Prov. S. Amer. 1956 (Ecuador)
PRPF	Prov. S. Amer. 1956 (Guyana)
PRPG	Prov. S. Amer. 1956 (Peru)
PRPH	Prov. S. Amer. 1956 (Venezuela)
PUR	Puerto Rico (Puerto Rico and Virgin Islands)
QAT	Qatar National (Qatar)

SUPERSEDES PAGE 36 OF MIL-STD-2411-1

QUO	Qornog (South Greenland)
REU	Reunion (Mascarene Island)
MOD	Rome 1940 (Sardinia Island)
SAE	Santo (DOS) 1965 (Espirito Santo Island)
SAO	Sao Braz (Sao Miguel, Santa Maria Islands, Azores)
SAP	Sapper Hill 1943 (East Falkland Islands)
SCK	Schwarzeck (Namibia)
SGM	Selvagem Grande (Salvage Islands)
SANM	South American 1969 (Mean value: Argentina, Bolivia, Brazil, Chile, Columbia, Ecuador, Guyana, Paraguay, Peru, Trinidad and Tobago, and Venezuela)
SANA	South American 1969 (Argentina)
SANB	South American 1969 (Bolivia)
SANC	South American 1969 (Brazil)
SAND	South American 1969 (Chile)
SANE	South American 1969 (Colombia)
SANF	South American 1969 (Ecuador excluding Galapagos Islands)
SANJ	South American 1969 (Ecuador including Baltra and Galapagos Islands)
SANG	South American 1969 (Guyana)
SANH	South American 1969 (Paraguay)
SANI	South American 1969 (Peru)
SANK	South American 1969 (Trinidad and Tobago)
SANL	South American 1969 (Venezuela)
SOA	South Asia (Southeast Asia, Singapore)
POS	SE Base (Porte Santo) (Porto Santo & Madeira Islands)
GRA	SW Base (Faial, Graciosa, Pico, Sao Jorge, and Terceira Island, Azores)
TIL	Timbali 1948 (Brunei and East Malaysia - Sarawak and Sabah)
TAN	Tananarive Observatory 1925 (Madagascar)
TOK	Tokyo (Mean Value)
TOYM	Tokyo (Mean value: Japan, Korea, and Okinawa)
TOYA	Tokyo (Japan)
TOYB	Tokyo (Korea)
TOYC	Tokyo (Okinawa)
TDC	Tristan Astro 1968 (Tristan da Cunha)
UND	Undetermined (processed as if WGS 84)
MVS	Viti Levu 1916 (Viti Levu Island, Fiji Islands)
WAK	Wake Island Astro 1952 (Wake Atoll)
ENW	Wake-Eniwetok 1960 (Marshall Islands)
WGC	World Geodetic System 1972
WGE	World Geodetic System 1984
YAC	Yacare (Uruguay)
ZAN	Zanderij (Surinam)

SUPERSEDES PAGE 37 OF MIL-STD-2411-1

Sounding Datum Codes

Code	Description
MHW	Mean High Water
MHWN	Mean High Water Neaps
MHWS	Mean High Water Springs
MHHW	Mean Higher High Water
MLW	Mean Low Water
MLWN	Mean Low Water Neaps
MLWS	Mean Low Water Springs
MLLW	Mean Lower Low Water

Vertical Datum Codes

Code	Vertical Datum
MSL	Mean Sea Level (All elevations in the data set are referenced to the geoid of the specified datum.)
GEOD	Geodetic (All elevations in the data set are referenced to the ellipsoid of the specified datum.)

NEW PAGE

PAGE INTENTIONALLY BLANK

NEW PAGE

5.3.2.3 Projection codes and parameters. The following are the valid projection codes and parameters currently registered for RPF products.

Code	Name	Parameters			
		A	B	C	D
AC	Albers Equal Area	Central Meridian	Std. Parallel Nearest to Equator	Std. Parallel Farthest from Equator	Latitude of Origin
AL	Azimuthal Equal Distant	Longitude of Tangency	Latitude of Tangency	---	---
RB	Hotine Oblique Mercator	Longitude of Great Circle	Latitude of Great Circle	Azimuth of Great Circle	---
LE	Lambert Conformal Conic	Central Meridian	Std. Parallel Nearest to Equator	Std. Parallel Farthest from Equator	Latitude of Origin
MC	Mercator	Central Meridian	Latitude of True scale	---	---
OC	Oblique Mercator	Longitude of Great Circle	Latitude of Great Circle	Azimuth of Great Circle	---
OD	Orthographic	Longitude of Tangency	Latitude of Tangency	---	---
PG	Polar Stereo-graphic	Central Meridian	Latitude of True Scale	Latitude of Origin	Longitude of Origin
PH	Polyconic	Central Meridian	Latitude of Origin	---	---
TC	Transverse Mercator	Central Meridian	Meridian of True North	Central Scale Factor	---
UT	Universal Transverse Mercator	Central Meridian	---	---	---

5.3.2.4 Navigation systems codes. The following are the valid navigation system codes currently registered for RPF products.

Code	Description
0	Unknown
1	Circular Radio Beacon
2	CONSOL
3	DECCA
4	Radio Direction Finding
5	Direction Finding Beacon
6	Distance Finding
7	Long Range Air Navigation System (LORAN)
8	OMEGA
9	Undefined
10	Radar Response Beacon (RACON)
11	Radar
12	Radio
13	Radio Telephone
14	Undefined
15	TV
16	Microwave
17	Non-Directional Radio Beacon (NCB)
18	Non-Directional Beacon/Distance Measuring Equipment
19	Radio Range (RNG)
20	VHF Omni Directional Radio Range (VOR)
21	VHF Omni Directional (VOR/DME)
22	VHF Omni Directional (VORTAC)
23	Tactical Air Navigation Equipment (TACAN)
24	Instrument Landing System (ILS)
25	(ILS/DME)
26	Localizer (LOC)
27	Localizer/Distance Measuring Equipment (LOC/DME)
28	Simplified Direction Facility
29	Landing Distance Available (LDA)
30	Microwave Landing System (MLS)
31	Fan Marker
32	Bone Marker
33	Radio Telegraph
34	Ground Control Approach (GCA)
35	Radar Antenna
36	Undefined
37	Precision Approach Radar (PAR)
38	Aeronautical Radio
39	Undefined
40	Radio Beacon
41	Rotating Loop Radio Beacon

42	Visual Flight Rules (VFR) Test Signal Maker
43	Undefined
44	Consol Radio Beacon
45	Aeronautical Radio Beacon
46	Radar Station
47	Hifix
48	Hyperfix
999	Other

5.3.2.5 Ellipsoid codes The following are the valid ellipsoid codes currently registered for RPF products.

Code	Description
AAY	Airy 1830
AUN	Australian National
BES	Bessel 1841
Bes	Bessel 1841 (Namibia)
CLK	Clarke 1866
CLJ	Clarke 1880
EVE	Everest
FM	Fischer 1960
FC	Fischer 1968
RE	Geodetic Reference System 1967
GRS	Geodetic Reference System 1980
HE	Helmert 1906
HO	Hough 1960
INT	International 1924
KRA	Krassovsky
AAM	Modified Airy
EVM	Modified Everest
FA	Modified Fischer 1960 (South Asia)
SA	South American 1969
WGA	World Geodetic System 1960 (WGS-60)
WGB	World Geodetic System 1966 (WGS-66)
WGC	World Geodetic System 1972 (WGS-72)
WGD	World Geodetic System 1984 (WGS-84)